# Judo Open Tomczak Cup 25.10.2026 Modliborzyce U09-20

## Competitors

Competitors: 2

| # | Name | Club | 1 | 2 | 1 | 2 | 1 | 2 | Wins | Pts | Pos |
|---|---|---|---|---|---|---|---|---|---|---|---|
| 1 | Olivier PASTUSZAK | Judo Team Modliborzyce | | 100 | | 0 | | 1 | 2 | 101 | 1 |
| 2 | Kaja PASTUSZAK | Judo Team Modliborzyce | 0 | | 1 | | 0 | | 1 | 1 | 2 |

## Matches

| Match | White | | | Blue | Result | Time |
|---|---|---|---|---|---|---|
| 1 | **Olivier PASTUSZAK** | 1 | 2 | Kaja PASTUSZAK | 100-000 | 2:07 |
| 2 | Olivier PASTUSZAK | 1 | 2 | **Kaja PASTUSZAK** | 000-001 | 2:00 |
| 3 | **Olivier PASTUSZAK** | 1 | 2 | Kaja PASTUSZAK | 001-000 | 2:00 |

## Results

| Pos | Name |
|---|---|
| 1 | Olivier PASTUSZAK, Judo Team Modliborzyce |
| 2 | Kaja PASTUSZAK, Judo Team Modliborzyce |

# Judo Open Tomczak Cup 25.10.2026 Modliborzyce U09-22

## Competitors A

Competitors: 6

| # | Name | Club | 1 | 2 | 3 | Wins | Pts | Pos |
|---|---|---|---|---|---|---|---|---|
| 1 | Aleksander JANOCIŃSKI | UKS Spartakus Lublin | X | 100 | 100 | 2 | 200 | 1 |
| 2 | Rostyslav KUCHERENKO | Bores | | X | | 0 | 0 | 3 |
| 3 | Franciszek SĄGOL | SameJudo | | 100 | X | 1 | 100 | 2 |

## Matches A

| Match | White | | | Blue | Result | Time |
|---|---|---|---|---|---|---|
| 1 | **Aleksander JANOCIŃSKI** | 1 | 2 | Rostyslav KUCHERENKO | 100-000 | 0:06 |
| 3 | **Aleksander JANOCIŃSKI** | 1 | 3 | Franciszek SĄGOL | 100-000 | 0:25 |
| 5 | Rostyslav KUCHERENKO | 2 | 3 | **Franciszek SĄGOL** | 000-100 | 0:33 |

## Competitors B

| # | Name | Club | 4 | 5 | 6 | Wins | Pts | Pos |
|---|---|---|---|---|---|---|---|---|
| 4 | Aleksander BUCZKOWSKI | JUDO REI ŚWIDNIK | X | 100 | 100 | 2 | 200 | 1 |
| 5 | Hubert MOTOWIDŁO | UKJ Millenium Rzeszów | | X | 100 | 1 | 100 | 2 |
| 6 | Marharyta RYKOVA | Judo Team Modliborzyce | | | X | 0 | 0 | 3 |

## Matches A

| Match | White | | | Blue | Result | Time |
|---|---|---|---|---|---|---|
| 2 | **Aleksander BUCZKOWSKI** | 4 | 5 | Hubert MOTOWIDŁO | 110-000 | 0:22 |
| 4 | **Aleksander BUCZKOWSKI** | 4 | 6 | Marharyta RYKOVA | 100-000 | 0:29 |
| 6 | **Hubert MOTOWIDŁO** | 5 | 6 | Marharyta RYKOVA | 101-000 | 0:52 |

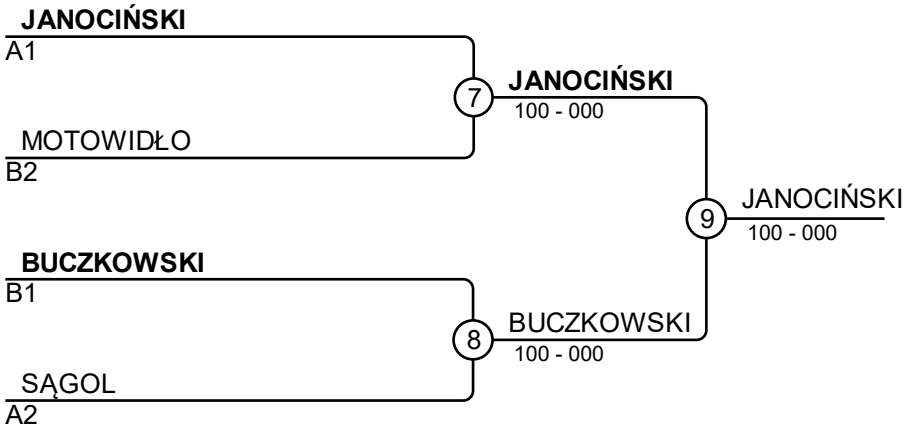


## Results

| Pos | Name |
|---|---|
| 1 | Aleksander JANOCIŃSKI, UKS Spartakus Lublin |
| 2 | Aleksander BUCZKOWSKI, JUDO REI ŚWIDNIK |
| 3 | Hubert MOTOWIDŁO, UKJ Millenium Rzeszów |
| 3 | Franciszek SĄGOL, SameJudo |

# Judo Open Tomczak Cup 25.10.2026 Modliborzyce U09-23

## Competitors A

Competitors: 6

| # | Name | Club | 1 | 2 | 3 | Wins | Pts | Pos |
|---|---|---|---|---|---|---|---|---|
| 1 | Liliana FERENC | SameJudo | X | 1 | 1 | 2 | 2 | 1 |
| 2 | Oliwier WOŹNIAK | SameJudo | | X | 100 | 1 | 100 | 2 |
| 3 | Stanisław KĘDRA | Judo Team Modliborzyce | | | X | 0 | 1 | 3 |

## Matches A

| Match | White | | | Blue | Result | Time |
|---|---|---|---|---|---|---|
| 1 | **Liliana FERENC** | 1 | 2 | Oliwier WOŹNIAK | 001s1-000s1 | 2:37 |
| 3 | **Liliana FERENC** | 1 | 3 | Stanisław KĘDRA | 002-001 | 2:00 |
| 5 | **Oliwier WOŹNIAK** | 2 | 3 | Stanisław KĘDRA | 100-000 | 0:00 |

## Competitors B

| # | Name | Club | 4 | 5 | 6 | Wins | Pts | Pos |
|---|---|---|---|---|---|---|---|---|
| 4 | Ernest RYKOWSKI | SameJudo | X | | | 0 | 1 | 3 |
| 5 | Karol KUŚMIDER | UKJ Millenium Rzeszów | 100 | X | 100 | 2 | 200 | 1 |
| 6 | Stanisław BRZOZOWSKI | SameJudo | 100 | | X | 1 | 110 | 2 |

## Matches A

| Match | White | | | Blue | Result | Time |
|---|---|---|---|---|---|---|
| 2 | Ernest RYKOWSKI | 4 | 5 | **Karol KUŚMIDER** | 000-100 | 0:07 |
| 4 | Ernest RYKOWSKI | 4 | 6 | **Stanisław BRZOZOWSKI** | 001-101 | 1:25 |
| 6 | **Karol KUŚMIDER** | 5 | 6 | Stanisław BRZOZOWSKI | 100-010 | 0:38 |

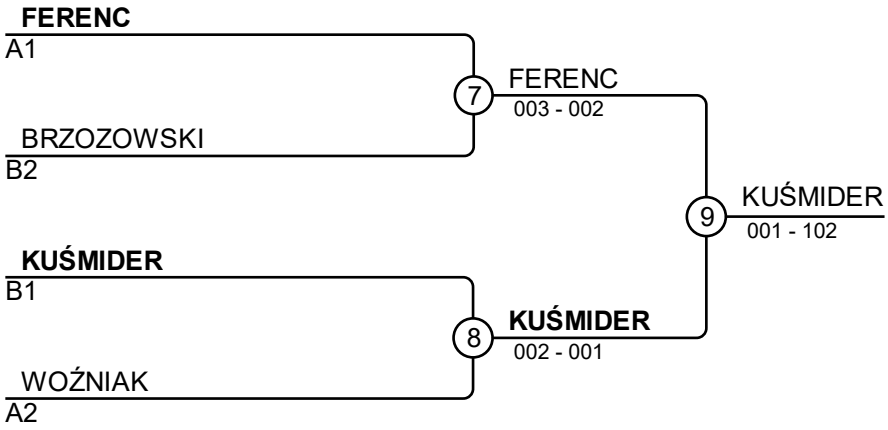


## Results

| Pos | Name |
|---|---|
| 1 | Karol KUŚMIDER, UKJ Millenium Rzeszów |
| 2 | Liliana FERENC, SameJudo |
| 3 | Stanisław BRZOZOWSKI, SameJudo |
| 3 | Oliwier WOŹNIAK, SameJudo |

# Judo Open Tomczak Cup 25.10.2026 Modliborzyce U09-24

## Competitors A

Competitors: 8

| # | Name | Club | 1 | 2 | 3 | 4 | Wins | Pts | Pos |
|---|---|---|---|---|---|---|---|---|---|
| 1 | Antoni DAŚKO | Judo Team Modliborzyce | X | 100 | | 100 | 2 | 200 | 2 |
| 2 | Nela BRZEZIŃSKA | SameJudo | | X | | 100 | 1 | 120 | 3 |
| 3 | Blanka MIKOS | Bushidan JUDO | 100 | 100 | X | 100 | 3 | 300 | 1 |
| 4 | Stanisław ZWOLAK | Judo Team Modliborzyce | | | | X | 0 | 10 | 4 |

## Matches A

| Match | White | | | Blue | Result | Time |
|---|---|---|---|---|---|---|
| 1 | **Antoni DAŚKO** | 1 | 2 | Nela BRZEZIŃSKA | 111-010 | 1:39 |
| 3 | **Blanka MIKOS** | 3 | 4 | Stanisław ZWOLAK | 100-000 | 0:14 |
| 5 | Antoni DAŚKO | 1 | 3 | **Blanka MIKOS** | 000s1-110 | 0:54 |
| 7 | **Nela BRZEZIŃSKA** | 2 | 4 | Stanisław ZWOLAK | 101-011 | 1:32 |
| 9 | **Antoni DAŚKO** | 1 | 4 | Stanisław ZWOLAK | 101s1-000 | 1:32 |
| 11 | Nela BRZEZIŃSKA | 2 | 3 | **Blanka MIKOS** | 011-100 | 0:33 |

## Competitors B

| # | Name | Club | 5 | 6 | 7 | 8 | Wins | Pts | Pos |
|---|---|---|---|---|---|---|---|---|---|
| 5 | Mikołaj KUŹNICKI | Judo Team Modliborzyce | X | | | | 0 | 0 | 4 |
| 6 | Aleksander PTASZNIK | Judo Team Modliborzyce | 100 | X | 100 | | 2 | 200 | 2 |
| 7 | Franciszek SUSKI | SameJudo | 100 | | X | | 1 | 100 | 3 |
| 8 | Rita KLADER | UKJ Millenium Rzeszów | 100 | 100 | 1 | X | 3 | 201 | 1 |

## Matches A

| Match | White | | | Blue | Result | Time |
|---|---|---|---|---|---|---|
| 2 | Mikołaj KUŹNICKI | 5 | 6 | **Aleksander PTASZNIK** | 000-100 | 0:35 |
| 4 | Franciszek SUSKI | 7 | 8 | **Rita KLADER** | 000-001 | 2:00 |
| 6 | Mikołaj KUŹNICKI | 5 | 7 | **Franciszek SUSKI** | 000-110 | 0:54 |
| 8 | Aleksander PTASZNIK | 6 | 8 | **Rita KLADER** | 000-100 | 0:47 |
| 10 | Mikołaj KUŹNICKI | 5 | 8 | **Rita KLADER** | 000-100 | 0:15 |
| 12 | **Aleksander PTASZNIK** | 6 | 7 | Franciszek SUSKI | 100-000s1 | 3:00 |

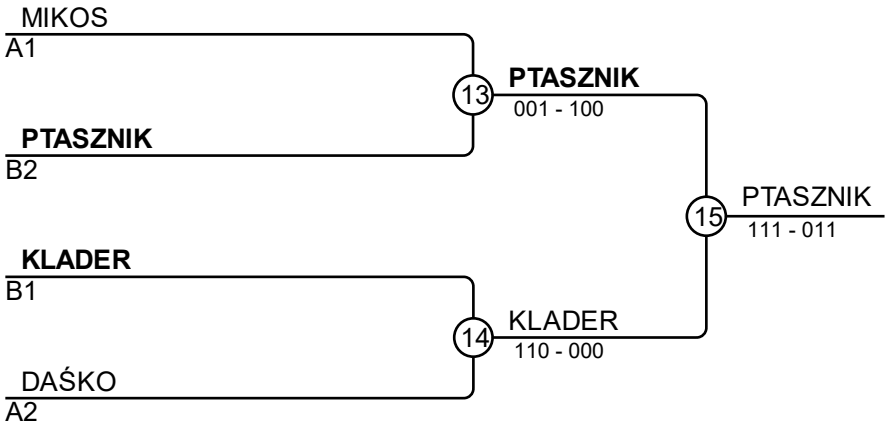


## Results

| Pos | Name |
|---|---|
| 1 | Aleksander PTASZNIK, Judo Team Modliborzyce |
| 2 | Rita KLADER, UKJ Millenium Rzeszów |
| 3 | Blanka MIKOS, Bushidan JUDO |
| 3 | Antoni DAŚKO, Judo Team Modliborzyce |

# Judo Open Tomczak Cup 25.10.2026 Modliborzyce U09-25

## Competitors A

Competitors: 7

| # | Name | Club | 1 | 2 | 3 | 4 | Wins | Pts | Pos |
|---|---|---|---|---|---|---|---|---|---|
| 1 | Oliwier NOWAK | UKJ Millenium Rzeszów | X | | | | 0 | 0 | 4 |
| 2 | Jan JACEK | HAYATE Judo | 100 | X | 100 | 100 | 3 | 300 | 1 |
| 3 | Leon SMOSARSKI | Bushidan JUDO | 100 | | X | 100 | 2 | 200 | 2 |
| 4 | Wojciech KAMIŃSKI | SameJudo | 100 | | | X | 1 | 100 | 3 |

## Matches A

| Match | White | | | Blue | Result | Time |
|---|---|---|---|---|---|---|
| 1 | Oliwier NOWAK | 1 | 2 | **Jan JACEK** | 000-100 | 0:27 |
| 2 | **Leon SMOSARSKI** | 3 | 4 | Wojciech KAMIŃSKI | 100-000 | 0:00 |
| 4 | Oliwier NOWAK | 1 | 3 | **Leon SMOSARSKI** | 000-100 | 0:05 |
| 5 | **Jan JACEK** | 2 | 4 | Wojciech KAMIŃSKI | 100-000 | 0:23 |
| 7 | Oliwier NOWAK | 1 | 4 | **Wojciech KAMIŃSKI** | 000-100 | 0:10 |
| 8 | **Jan JACEK** | 2 | 3 | Leon SMOSARSKI | 100-000 | 0:04 |

## Competitors B

| # | Name | Club | 5 | 6 | 7 | Wins | Pts | Pos |
|---|---|---|---|---|---|---|---|---|
| 5 | Jan JADAM | UKJ Millenium Rzeszów | X | | 100 | 1 | 100 | 2 |
| 6 | Hubert ŻYGŁOWICZ | UKS MOSIR JASŁO | 100 | X | 100 | 2 | 200 | 1 |
| 7 | Leon WIDZ | Judo Team Modliborzyce | | | X | 0 | 0 | 3 |

## Matches A

| Match | White | | | Blue | Result | Time |
|---|---|---|---|---|---|---|
| 3 | Jan JADAM | 5 | 6 | **Hubert ŻYGŁOWICZ** | 000-100 | 0:06 |
| 6 | **Jan JADAM** | 5 | 7 | Leon WIDZ | 100-000 | 0:17 |
| 9 | **Hubert ŻYGŁOWICZ** | 6 | 7 | Leon WIDZ | 100-000 | 0:07 |

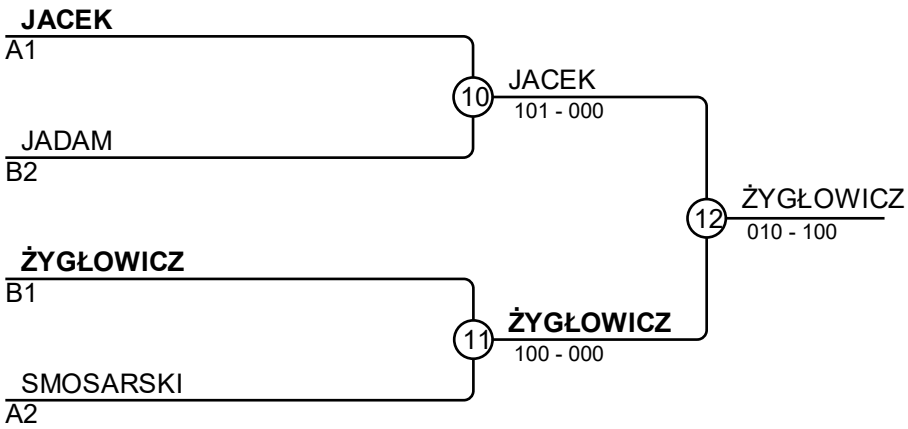


## Results

| Pos | Name |
|---|---|
| 1 | Hubert ŻYGŁOWICZ, UKS MOSIR JASŁO |
| 2 | Jan JACEK, HAYATE Judo |
| 3 | Jan JADAM, UKJ Millenium Rzeszów |
| 3 | Leon SMOSARSKI, Bushidan JUDO |

# Judo Open Tomczak Cup 25.10.2026 Modliborzyce U09-26

## Competitors A

Competitors: 6

| # | Name | Club | 1 | 2 | 3 | Wins | Pts | Pos |
|---|---|---|---|---|---|---|---|---|
| 1 | Maksymilian KRAS | Judo MOSiR Tuchów | X | 100 | 100 | 2 | 200 | 1 |
| 2 | Maja CHWAŁEK | Judo Team Modliborzyce | | X | 1 | 1 | 1 | 2 |
| 3 | Ignacy GRAD | Judo Team Modliborzyce | | | X | 0 | 0 | 3 |

## Matches A

| Match | White | | | Blue | Result | Time |
|---|---|---|---|---|---|---|
| 1 | **Maksymilian KRAS** | 1 | 2 | Maja CHWAŁEK | 100-000 | 0:14 |
| 3 | **Maksymilian KRAS** | 1 | 3 | Ignacy GRAD | 100-000 | 0:05 |
| 5 | **Maja CHWAŁEK** | 2 | 3 | Ignacy GRAD | 001-000 | 2:00 |

## Competitors B

| # | Name | Club | 4 | 5 | 6 | Wins | Pts | Pos |
|---|---|---|---|---|---|---|---|---|
| 4 | Viktor LUDIAN | Judo Team Modliborzyce | X | | 100 | 1 | 100 | 2 |
| 5 | Franek SOCZEWKA | SameJudo | 100 | X | 100 | 2 | 200 | 1 |
| 6 | Natan LUBAK | HAYATE Judo | | | X | 0 | 1 | 3 |

## Matches A

| Match | White | | | Blue | Result | Time |
|---|---|---|---|---|---|---|
| 2 | Viktor LUDIAN | 4 | 5 | **Franek SOCZEWKA** | 000-100 | 0:14 |
| 4 | **Viktor LUDIAN** | 4 | 6 | Natan LUBAK | 102-001 | 1:52 |
| 6 | **Franek SOCZEWKA** | 5 | 6 | Natan LUBAK | 100-000 | 0:10 |

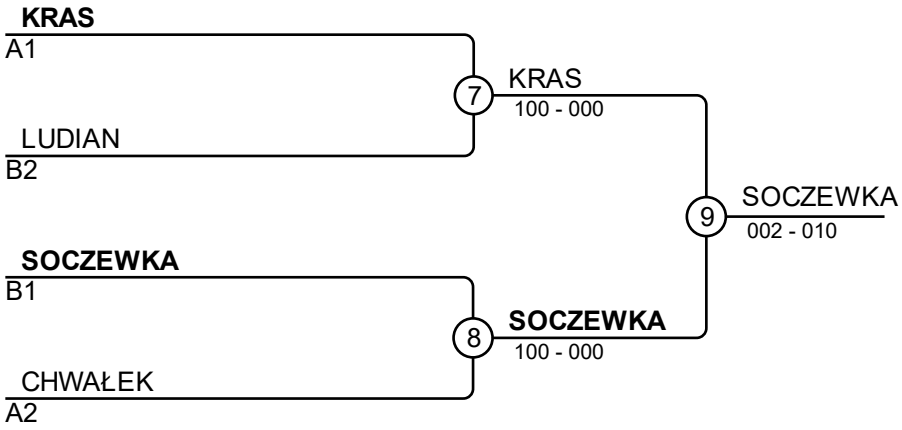


## Results

| Pos | Name |
|---|---|
| 1 | Franek SOCZEWKA, SameJudo |
| 2 | Maksymilian KRAS, Judo MOSiR Tuchów |
| 3 | Viktor LUDIAN, Judo Team Modliborzyce |
| 3 | Maja CHWAŁEK, Judo Team Modliborzyce |

# Judo Open Tomczak Cup 25.10.2026 Modliborzyce U09-27

## Competitors A

Competitors: 8

| # | Name | Club | 1 | 2 | 3 | 4 | Wins | Pts | Pos |
|---|---|---|---|---|---|---|---|---|---|
| 1 | Hanna MYSZAK | Judo Team Modliborzyce | X | 100 | 10 | | 2 | 110 | 2 |
| 2 | Oliwier NAREWSKI | SameJudo | | X | | | 0 | 0 | 4 |
| 3 | Emilia KOLASA | Judo Team Modliborzyce | | 100 | X | | 1 | 101 | 3 |
| 4 | Zofia BALCER | SameJudo | 10 | 100 | 100 | X | 3 | 210 | 1 |

## Matches A

| Match | White | | | Blue | Result | Time |
|---|---|---|---|---|---|---|
| 1 | **Hanna MYSZAK** | 1 | 2 | Oliwier NAREWSKI | 100-000 | 0:00 |
| 3 | Emilia KOLASA | 3 | 4 | **Zofia BALCER** | 000-100 | 0:09 |
| 5 | **Hanna MYSZAK** | 1 | 3 | Emilia KOLASA | 011-001 | 2:00 |
| 7 | Oliwier NAREWSKI | 2 | 4 | **Zofia BALCER** | 000-100 | 0:00 |
| 9 | Hanna MYSZAK | 1 | 4 | **Zofia BALCER** | 000-010 | 2:00 |
| 11 | Oliwier NAREWSKI | 2 | 3 | **Emilia KOLASA** | 000-100 | 0:00 |

## Competitors B

| # | Name | Club | 5 | 6 | 7 | 8 | Wins | Pts | Pos |
|---|---|---|---|---|---|---|---|---|---|
| 5 | Olivier JÓZEFOWSKI | SameJudo | X | 100 | 100 | 100 | 3 | 300 | 1 |
| 6 | Szymon KOTWICA | Judo Team Modliborzyce | | X | 100 | 100 | 2 | 200 | 2 |
| 7 | Karolina PIZUN | UKJ Legion Zamość | | | X | 100 | 1 | 100 | 3 |
| 8 | Kacper SERWATKA | Judo Team Modliborzyce | | | | X | 0 | 0 | 4 |

## Matches A

| Match | White | | | Blue | Result | Time |
|---|---|---|---|---|---|---|
| 2 | **Olivier JÓZEFOWSKI** | 5 | 6 | Szymon KOTWICA | 100-000 | 0:12 |
| 4 | **Karolina PIZUN** | 7 | 8 | Kacper SERWATKA | 100-000 | 0:00 |
| 6 | **Olivier JÓZEFOWSKI** | 5 | 7 | Karolina PIZUN | 101-000 | 1:35 |
| 8 | **Szymon KOTWICA** | 6 | 8 | Kacper SERWATKA | 100-000 | 0:00 |
| 10 | **Olivier JÓZEFOWSKI** | 5 | 8 | Kacper SERWATKA | 100-000 | 0:00 |
| 12 | **Szymon KOTWICA** | 6 | 7 | Karolina PIZUN | 100-000 | 0:33 |

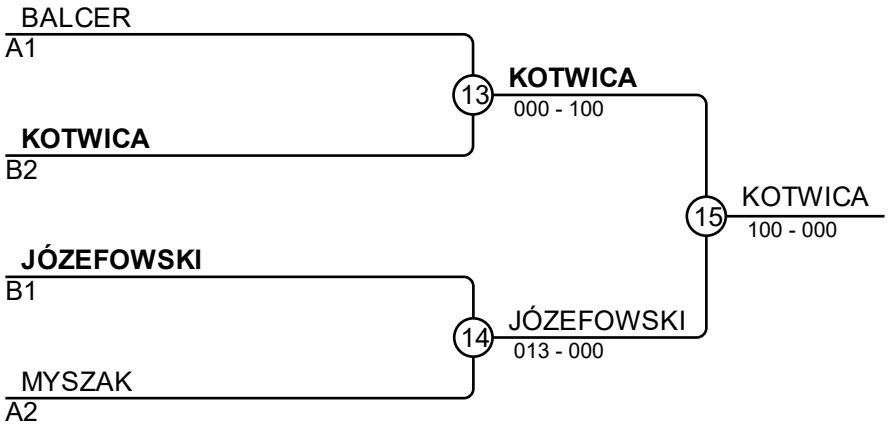


## Results

| Pos | Name |
|---|---|
| 1 | Szymon KOTWICA, Judo Team Modliborzyce |
| 2 | Olivier JÓZEFOWSKI, SameJudo |
| 3 | Zofia BALCER, SameJudo |
| 3 | Hanna MYSZAK, Judo Team Modliborzyce |

# Judo Open Tomczak Cup 25.10.2026 Modliborzyce U09-28

## Competitors A

Competitors: 6

| # | Name | Club | 1 | 2 | 3 | Wins | Pts | Pos |
|---|---|---|---|---|---|---|---|---|
| 1 | Jakub POLAK | SameJudo | X | 100 | | 1 | 110 | 1 |
| 2 | Miłosz GŁOWACKI | Bushidan JUDO | | X | 10 | 1 | 10 | 2 |
| 3 | Szymon ŁUKASZYK | UKJ Legion Zamość | 1 | | X | 1 | 1 | 3 |

## Matches A

| Match | White | | | Blue | Result | Time |
|---|---|---|---|---|---|---|
| 1 | **Jakub POLAK** | 1 | 2 | Miłosz GŁOWACKI | 101-000 | 0:17 |
| 3 | Jakub POLAK | 1 | 3 | **Szymon ŁUKASZYK** | 010-011 | 2:16 |
| 5 | **Miłosz GŁOWACKI** | 2 | 3 | Szymon ŁUKASZYK | 010s2-000s1 | 2:16 |

## Competitors B

| # | Name | Club | 4 | 5 | 6 | Wins | Pts | Pos |
|---|---|---|---|---|---|---|---|---|
| 4 | Stanisław DEDO | UKS MOSIR JASŁO | X | | 100 | 1 | 100 | 2 |
| 5 | Michał CHMIEL | SameJudo | 100 | X | 100 | 2 | 200 | 1 |
| 6 | Rodion KUCHERENKO | Bores | | | X | 0 | 1 | 3 |

## Matches A

| Match | White | | | Blue | Result | Time |
|---|---|---|---|---|---|---|
| 2 | Stanisław DEDO | 4 | 5 | **Michał CHMIEL** | 000-100 | 0:07 |
| 4 | **Stanisław DEDO** | 4 | 6 | Rodion KUCHERENKO | 100-001 | 0:48 |
| 6 | **Michał CHMIEL** | 5 | 6 | Rodion KUCHERENKO | 100-000 | 0:07 |

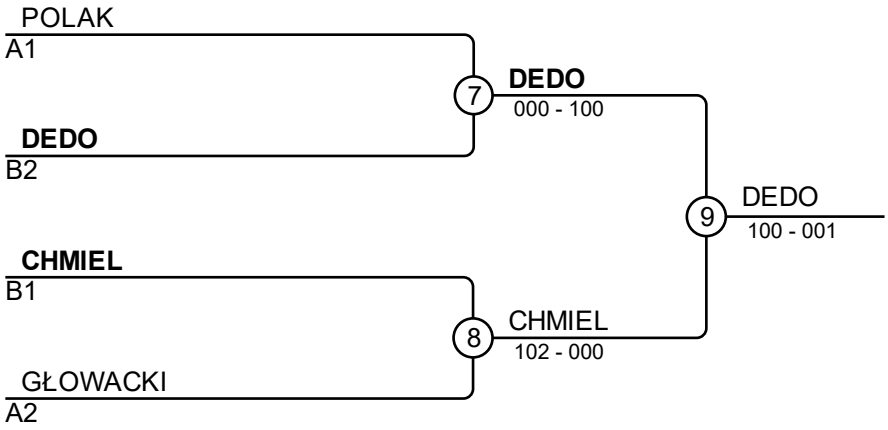


## Results

| Pos | Name |
|---|---|
| 1 | Stanisław DEDO, UKS MOSIR JASŁO |
| 2 | Michał CHMIEL, SameJudo |
| 3 | Jakub POLAK, SameJudo |
| 3 | Miłosz GŁOWACKI, Bushidan JUDO |

# Judo Open Tomczak Cup 25.10.2026 Modliborzyce U09-29

## Competitors A

Competitors: 6

| # | Name | Club | 1 | 2 | 3 | Wins | Pts | Pos |
|---|---|---|---|---|---|---|---|---|
| 1 | Laura BUBICZ | JUDO REI ŚWIDNIK | X | 100 | | 1 | 101 | 2 |
| 2 | Matvii KOLOMIETS | SameJudo | | X | | 0 | 0 | 3 |
| 3 | Helena GRUDNIEWICZ | SameJudo | 10 | 10 | X | 2 | 20 | 1 |

## Matches A

| Match | White | | | Blue | Result | Time |
|---|---|---|---|---|---|---|
| 1 | **Laura BUBICZ** | 1 | 2 | Matvii KOLOMIETS | 101-000 | 0:43 |
| 3 | Laura BUBICZ | 1 | 3 | **Helena GRUDNIEWICZ** | 001-010 | 2:00 |
| 5 | Matvii KOLOMIETS | 2 | 3 | **Helena GRUDNIEWICZ** | 000s1-010s1 | 2:00 |

## Competitors B

| # | Name | Club | 4 | 5 | 6 | Wins | Pts | Pos |
|---|---|---|---|---|---|---|---|---|
| 4 | Zygmunt ZAJDEL | SameJudo | X | 10 | 1 | 2 | 11 | 1 |
| 5 | Józef PRÓCHNIEWSKI | SameJudo | | X | 100 | 1 | 100 | 2 |
| 6 | Michał ZABIELSKI | MULKS T-O Radzyń Podlaski | | | X | 0 | 1 | 3 |

## Matches A

| Match | White | | | Blue | Result | Time |
|---|---|---|---|---|---|---|
| 2 | **Zygmunt ZAJDEL** | 4 | 5 | Józef PRÓCHNIEWSKI | 011-000 | 2:00 |
| 4 | **Zygmunt ZAJDEL** | 4 | 6 | Michał ZABIELSKI | 001-000 | 2:00 |
| 6 | **Józef PRÓCHNIEWSKI** | 5 | 6 | Michał ZABIELSKI | 101-001 | 3:00 |

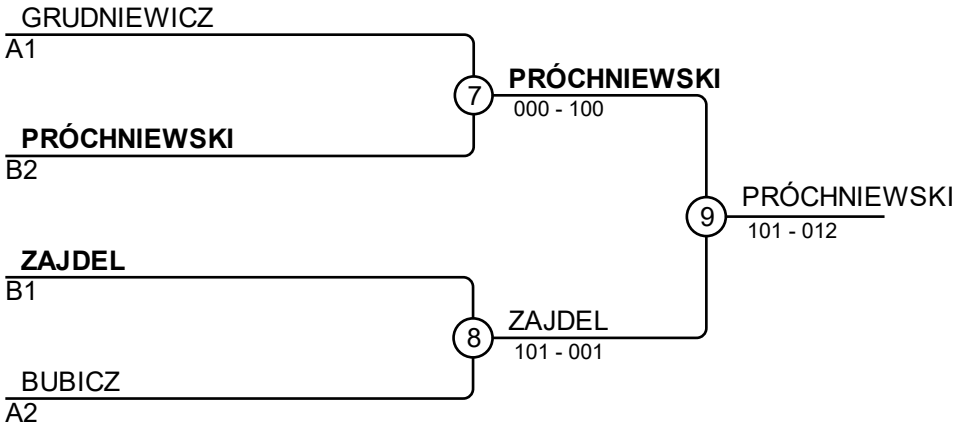


## Results

| Pos | Name |
|---|---|
| 1 | Józef PRÓCHNIEWSKI, SameJudo |
| 2 | Zygmunt ZAJDEL, SameJudo |
| 3 | Helena GRUDNIEWICZ, SameJudo |
| 3 | Laura BUBICZ, JUDO REI ŚWIDNIK |

# Judo Open Tomczak Cup 25.10.2026 Modliborzyce U09-31

## Competitors A

Competitors: 8

| # | Name | Club | 1 | 2 | 3 | 4 | Wins | Pts | Pos |
|---|---|---|---|---|---|---|---|---|---|
| 1 | Aleksander JACZEWSKI | SameJudo | X | | | 100 | 1 | 100 | 3 |
| 2 | Aleksander KUZIAK | SameJudo | 10 | X | 100 | 100 | 3 | 210 | 1 |
| 3 | Gustaw POLAŃSKI | UKJ Millenium Rzeszów | 100 | | X | | 1 | 110 | 2 |
| 4 | Oliwier OPAŁA | UKJ Legion Zamość | | | 100 | X | 1 | 100 | 4 |

## Matches A

| Match | White | | | Blue | Result | Time |
|---|---|---|---|---|---|---|
| 1 | Aleksander JACZEWSKI | 1 | 2 | **Aleksander KUZIAK** | 000-012 | 2:00 |
| 3 | Gustaw POLAŃSKI | 3 | 4 | **Oliwier OPAŁA** | 011-101 | 0:59 |
| 5 | Aleksander JACZEWSKI | 1 | 3 | **Gustaw POLAŃSKI** | 000-101 | 1:13 |
| 7 | **Aleksander KUZIAK** | 2 | 4 | Oliwier OPAŁA | 100-000 | 0:07 |
| 9 | **Aleksander JACZEWSKI** | 1 | 4 | Oliwier OPAŁA | 102-000 | 1:40 |
| 11 | **Aleksander KUZIAK** | 2 | 3 | Gustaw POLAŃSKI | 100-000 | 0:41 |

## Competitors B

| # | Name | Club | 5 | 6 | 7 | 8 | Wins | Pts | Pos |
|---|---|---|---|---|---|---|---|---|---|
| 5 | Stanisław PĘCZKOWSKI | JUDO REI ŚWIDNIK | X | | | 100 | 1 | 100 | 3 |
| 6 | Paweł SAWICKI | Judo Team Modliborzyce | 10 | X | 100 | 100 | 3 | 210 | 1 |
| 7 | Nazar OPEIDA | Bores | 100 | | X | 100 | 2 | 200 | 2 |
| 8 | Julia SIEDLECKA | SameJudo | | | | X | 0 | 0 | 4 |

## Matches A

| Match | White | | | Blue | Result | Time |
|---|---|---|---|---|---|---|
| 2 | Stanisław PĘCZKOWSKI | 5 | 6 | **Paweł SAWICKI** | 000-012 | 2:00 |
| 4 | **Nazar OPEIDA** | 7 | 8 | Julia SIEDLECKA | 100-000 | 0:17 |
| 6 | Stanisław PĘCZKOWSKI | 5 | 7 | **Nazar OPEIDA** | 000-100 | 0:14 |
| 8 | **Paweł SAWICKI** | 6 | 8 | Julia SIEDLECKA | 100-000 | 0:29 |
| 10 | **Stanisław PĘCZKOWSKI** | 5 | 8 | Julia SIEDLECKA | 100-000 | 0:11 |
| 12 | **Paweł SAWICKI** | 6 | 7 | Nazar OPEIDA | 100-000 | 0:13 |

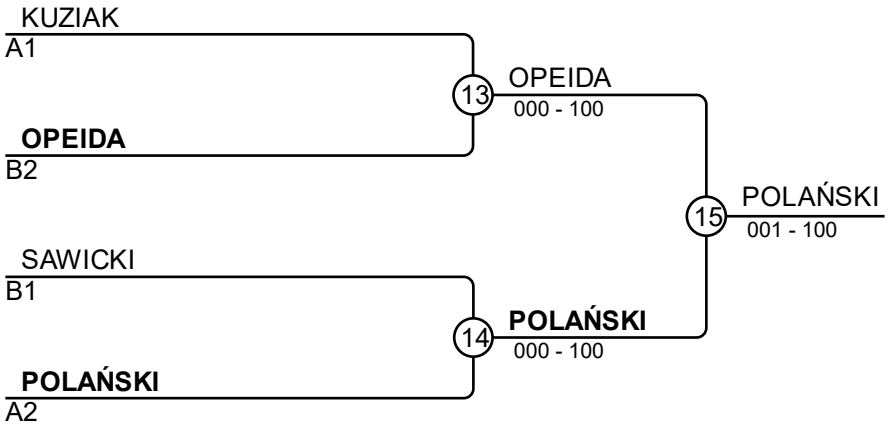


## Results

| Pos | Name |
|---|---|
| 1 | Gustaw POLAŃSKI, UKJ Millenium Rzeszów |
| 2 | Nazar OPEIDA, Bores |
| 3 | Aleksander KUZIAK, SameJudo |
| 3 | Paweł SAWICKI, Judo Team Modliborzyce |

# Judo Open Tomczak Cup 25.10.2026 Modliborzyce U09-34

## Competitors A

Competitors: 8

| # | Name | Club | 1 | 2 | 3 | 4 | Wins | Pts | Pos |
|---|---|---|---|---|---|---|---|---|---|
| 1 | Adam CIBOROWSKI | Akademia Judo PERUN | X | | 100 | 100 | 2 | 200 | 2 |
| 2 | Emilia BORCZ | UKJ Millenium Rzeszów | 100 | X | 100 | 100 | 3 | 300 | 1 |
| 3 | Igor ZAJĄC | Bushidan JUDO | | | X | | 0 | 0 | 4 |
| 4 | Piotr MUSOŁA | SameJudo | | | 100 | X | 1 | 101 | 3 |

## Matches A

| Match | White | | | Blue | Result | Time |
|---|---|---|---|---|---|---|
| 1 | Adam CIBOROWSKI | 1 | 2 | **Emilia BORCZ** | 000s1-110 | 1:44 |
| 3 | Igor ZAJĄC | 3 | 4 | **Piotr MUSOŁA** | 000-101 | 1:59 |
| 5 | **Adam CIBOROWSKI** | 1 | 3 | Igor ZAJĄC | 100-000 | 0:23 |
| 7 | **Emilia BORCZ** | 2 | 4 | Piotr MUSOŁA | 100-000 | 0:14 |
| 9 | **Adam CIBOROWSKI** | 1 | 4 | Piotr MUSOŁA | 100-002 | 0:38 |
| 11 | **Emilia BORCZ** | 2 | 3 | Igor ZAJĄC | 110-000 | 0:21 |

## Competitors B

| # | Name | Club | 5 | 6 | 7 | 8 | Wins | Pts | Pos |
|---|---|---|---|---|---|---|---|---|---|
| 5 | Aurelia MUSZYŃSKA | SameJudo | X | | | | 0 | 0 | 4 |
| 6 | Weronika SIDOR | SameJudo | 100 | X | | | 1 | 100 | 3 |
| 7 | Oliwier MISIAK | UKJ Millenium Rzeszów | 100 | 100 | X | | 2 | 200 | 2 |
| 8 | Artem PIKALIUK | Bores | 100 | 100 | 100 | X | 3 | 300 | 1 |

## Matches A

| Match | White | | | Blue | Result | Time |
|---|---|---|---|---|---|---|
| 2 | Aurelia MUSZYŃSKA | 5 | 6 | **Weronika SIDOR** | 000-100 | 0:37 |
| 4 | Oliwier MISIAK | 7 | 8 | **Artem PIKALIUK** | 000-100 | 0:07 |
| 6 | Aurelia MUSZYŃSKA | 5 | 7 | **Oliwier MISIAK** | 000-100 | 0:30 |
| 8 | Weronika SIDOR | 6 | 8 | **Artem PIKALIUK** | 000-100 | 0:22 |
| 10 | Aurelia MUSZYŃSKA | 5 | 8 | **Artem PIKALIUK** | 000-100 | 0:04 |
| 12 | Weronika SIDOR | 6 | 7 | **Oliwier MISIAK** | 000-100 | 0:59 |

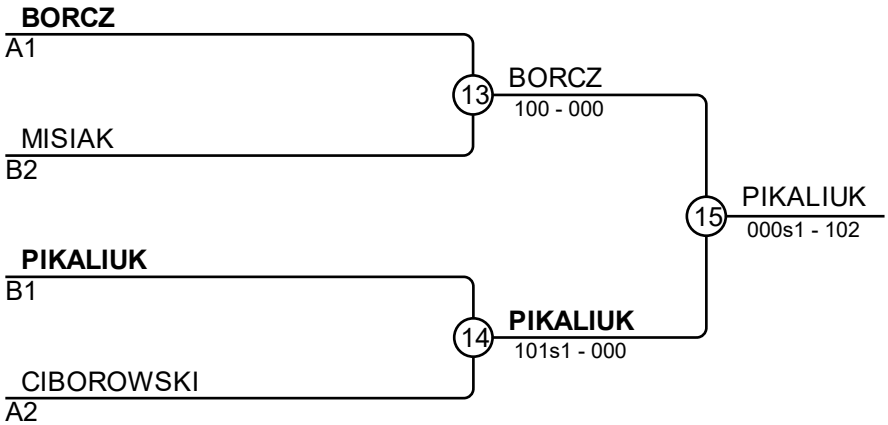


## Results

| Pos | Name |
|---|---|
| 1 | Artem PIKALIUK, Bores |
| 2 | Emilia BORCZ, UKJ Millenium Rzeszów |
| 3 | Oliwier MISIAK, UKJ Millenium Rzeszów |
| 3 | Adam CIBOROWSKI, Akademia Judo PERUN |

# Judo Open Tomczak Cup 25.10.2026 Modliborzyce U09-39

## Competitors

Competitors: 2

| # | Name | Club | 1 | 2 | 1 | 2 | 1 | 2 | Wins | Pts | Pos |
|---|---|---|---|---|---|---|---|---|---|---|---|
| 1 | Zuzanna DRZEWNA | Judo Team Modliborzyce | | 0 | | 0 | | | 0 | 0 | 2 |
| 2 | Stanisław KWAŚNY | MULKS T-O Radzyń Podlaski | 100 | | 100 | | | | 2 | 200 | 1 |

## Matches

| Match | White | | | Blue | Result | Time |
|---|---|---|---|---|---|---|
| 1 | Zuzanna DRZEWNA | 1 | 2 | **Stanisław KWAŚNY** | 000-110 | 0:34 |
| 2 | Zuzanna DRZEWNA | 1 | 2 | **Stanisław KWAŚNY** | 000-110 | 0:50 |
| 3 | Zuzanna DRZEWNA | 1 | 2 | Stanisław KWAŚNY | | |

## Results

| Pos | Name |
|---|---|
| 1 | Stanisław KWAŚNY, MULKS T-O Radzyń Podlaski |
| 2 | Zuzanna DRZEWNA, Judo Team Modliborzyce |

# Judo Open Tomczak Cup 25.10.2026 Modliborzyce U09-47

## Competitors

Competitors: 3

| # | Name | Club | 1 | 2 | 3 | Wins | Pts | Pos |
|---|---|---|---|---|---|---|---|---|
| 1 | Franciszek STUDZIŃSKI | Judo Team Modliborzyce | | 100 | 0 | 1 | 100 | 2 |
| 2 | Julia STRYCZEK | Judo Team Modliborzyce | 0 | | 0 | 0 | 0 | 3 |
| 3 | Nikodem BORZĘCKI | Bushidan JUDO | ½ | 100 | | 2 | 100½ | 1 |

## Matches

| Match | White | | | Blue | Result | Time |
|---|---|---|---|---|---|---|
| 1 | **Franciszek STUDZIŃSKI** | 1 | 2 | Julia STRYCZEK | 100-000 | 0:26 |
| 2 | Franciszek STUDZIŃSKI | 1 | 3 | **Nikodem BORZĘCKI** | 000s1-000s1 | 2:00 |
| 3 | Julia STRYCZEK | 2 | 3 | **Nikodem BORZĘCKI** | 000-101 | 1:24 |

## Results

| Pos | Name |
|---|---|
| 1 | Nikodem BORZĘCKI, Bushidan JUDO |
| 2 | Franciszek STUDZIŃSKI, Judo Team Modliborzyce |
| 3 | Julia STRYCZEK, Judo Team Modliborzyce |

# Judo Open Tomczak Cup 25.10.2026 Modliborzyce FU11-26

## Competitors

Competitors: 2

| # | Name | Club | 1 | 2 | 1 | 2 | 1 | 2 | Wins | Pts | Pos |
|---|---|---|---|---|---|---|---|---|---|---|---|
| 1 | Emilia HNAT | UKS MOSIR JASŁO | | 0 | | 0 | | | 0 | 0 | 2 |
| 2 | Julia PASIECZNIK | UKJ Millenium Rzeszów | 10 | | 100 | | | | 2 | 110 | 1 |

## Matches

| Match | White | | | Blue | Result | Time |
|---|---|---|---|---|---|---|
| 1 | Emilia HNAT | 1 | 2 | **Julia PASIECZNIK** | 000-011 | 2:00 |
| 2 | Emilia HNAT | 1 | 2 | **Julia PASIECZNIK** | 000-100 | 0:58 |
| 3 | Emilia HNAT | 1 | 2 | Julia PASIECZNIK | | |

## Results

| Pos | Name |
|---|---|
| 1 | Julia PASIECZNIK, UKJ Millenium Rzeszów |
| 2 | Emilia HNAT, UKS MOSIR JASŁO |

# Judo Open Tomczak Cup 25.10.2026 Modliborzyce FU11-29

## Competitors A

Competitors: 6

| # | Name | Club | 1 | 2 | 3 | Wins | Pts | Pos |
|---|---|---|---|---|---|---|---|---|
| 1 | Antonina SUSKA | SameJudo | X | 100 | 100 | 2 | 200 | 1 |
| 2 | Michalina CZARNECKA | UKS MOSIR JASŁO | | X | 100 | 1 | 101 | 2 |
| 3 | Maria GÓRA | UKJ Legion Zamość | | | X | 0 | 0 | 3 |

## Matches A

| Match | White | | | Blue | Result | Time |
|---|---|---|---|---|---|---|
| 1 | **Antonina SUSKA** | 1 | 2 | Michalina CZARNECKA | 100-001 | 2:00 |
| 3 | **Antonina SUSKA** | 1 | 3 | Maria GÓRA | 100-000 | 0:37 |
| 5 | **Michalina CZARNECKA** | 2 | 3 | Maria GÓRA | 100-000 | 1:27 |

## Competitors B

| # | Name | Club | 4 | 5 | 6 | Wins | Pts | Pos |
|---|---|---|---|---|---|---|---|---|
| 4 | Zuzanna CUP | Judo MOSiR Tuchów | X | | | 0 | 0 | 3 |
| 5 | Lena DEDO | UKS MOSIR JASŁO | 100 | X | 1 | 2 | 101 | 1 |
| 6 | Natasza KUZIA | UKJ Millenium Rzeszów | 100 | | X | 1 | 100 | 2 |

## Matches A

| Match | White | | | Blue | Result | Time |
|---|---|---|---|---|---|---|
| 2 | Zuzanna CUP | 4 | 5 | **Lena DEDO** | 000-110 | 0:32 |
| 4 | Zuzanna CUP | 4 | 6 | **Natasza KUZIA** | 000s1-100 | 1:30 |
| 6 | **Lena DEDO** | 5 | 6 | Natasza KUZIA | 001s2-000 | 2:00 |

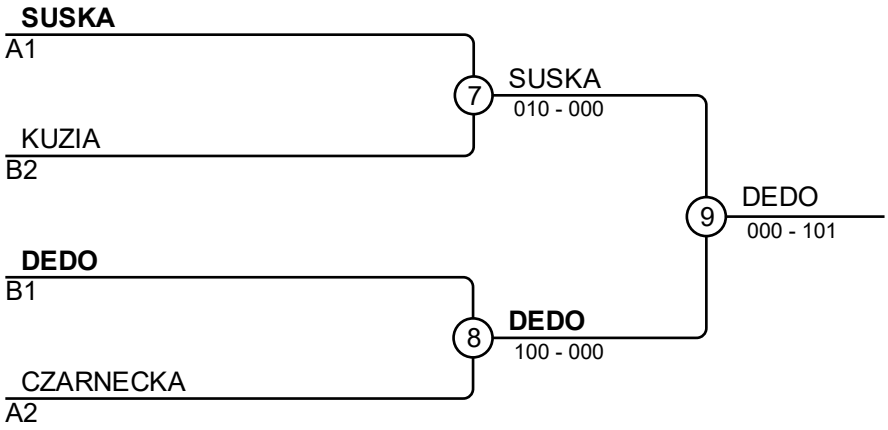


## Results

| Pos | Name |
|---|---|
| 1 | Lena DEDO, UKS MOSIR JASŁO |
| 2 | Antonina SUSKA, SameJudo |
| 3 | Natasza KUZIA, UKJ Millenium Rzeszów |
| 3 | Michalina CZARNECKA, UKS MOSIR JASŁO |

# Judo Open Tomczak Cup 25.10.2026 Modliborzyce FU11-32

Competitors: 9

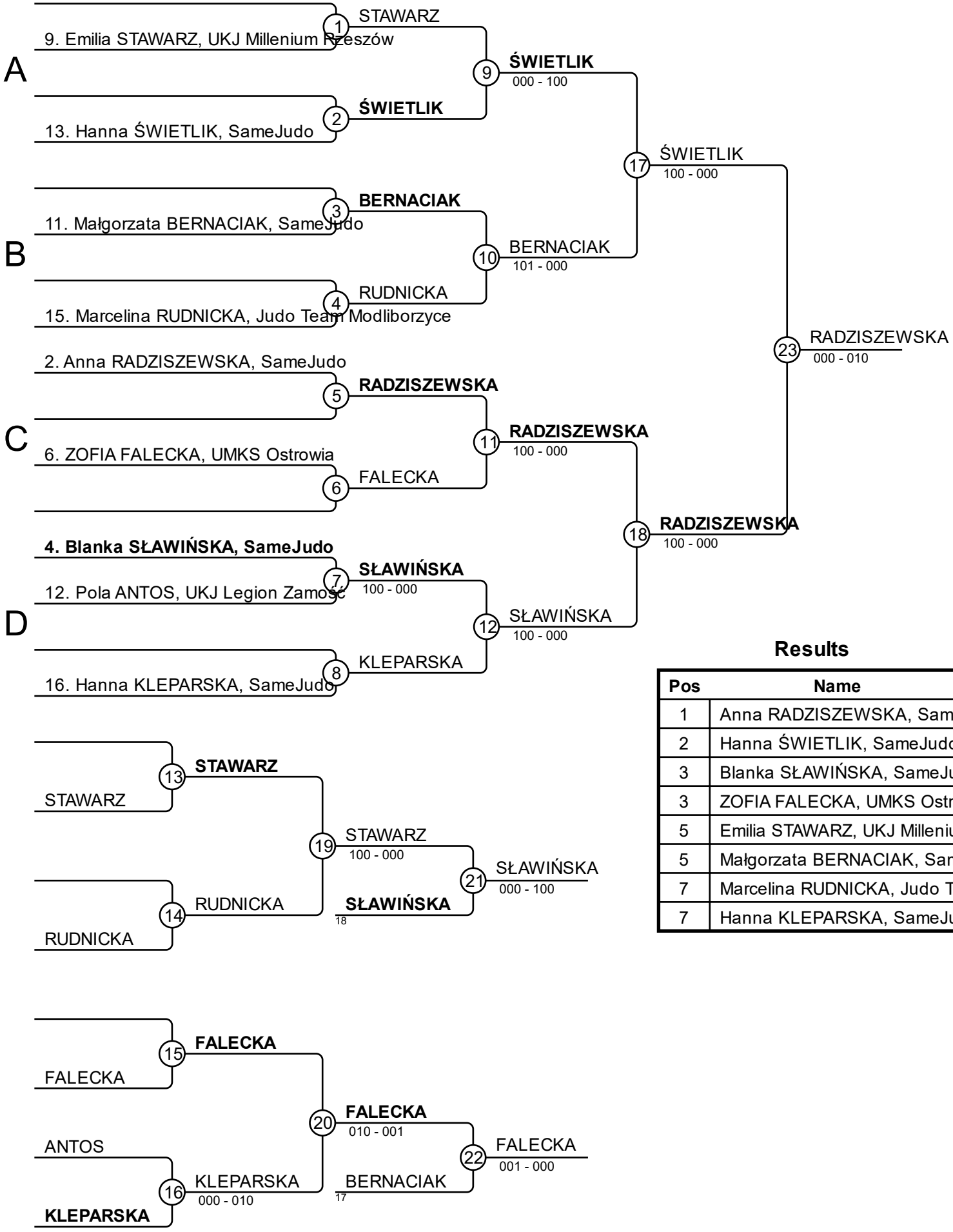


## Results

| Pos | Name |
|---|---|
| 1 | Anna RADZISZEWSKA, SameJudo |
| 2 | Hanna ŚWIETLIK, SameJudo |
| 3 | Blanka SŁAWIŃSKA, SameJudo |
| 3 | ZOFIA FALECKA, UMKS Ostrowia |
| 5 | Emilia STAWARZ, UKJ Millenium Rze |
| 5 | Małgorzata BERNACIAK, SameJudo |
| 7 | Marcelina RUDNICKA, Judo Team M |
| 7 | Hanna KLEPARSKA, SameJudo |

# Judo Open Tomczak Cup 25.10.2026 Modliborzyce FU11-35

Competitors: 9

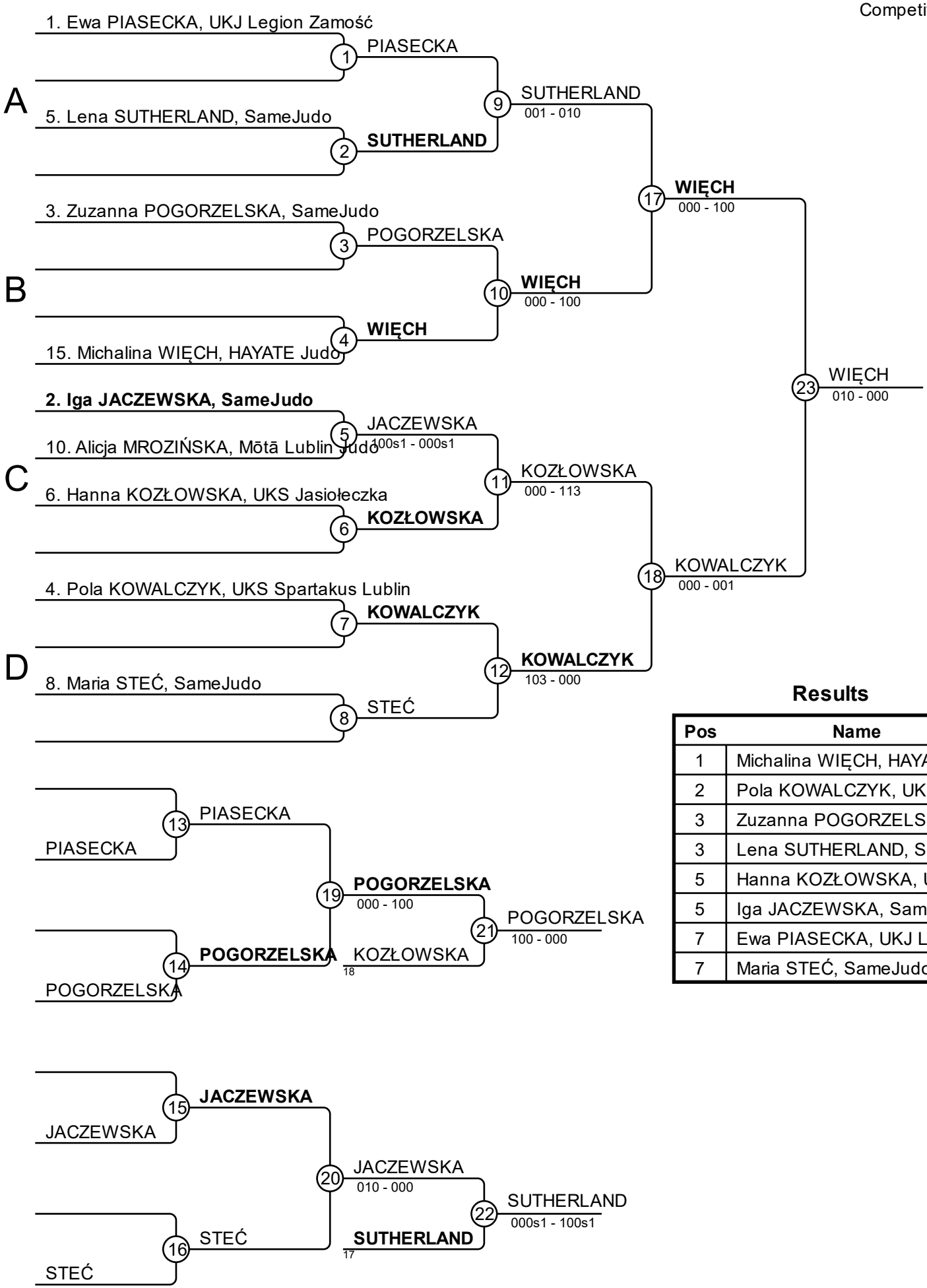


## Results

| Pos | Name |
|---|---|
| 1 | Michalina WIĘCH, HAYATE Judo |
| 2 | Pola KOWALCZYK, UKS Spartakus |
| 3 | Zuzanna POGORZELSKA, SameJu |
| 3 | Lena SUTHERLAND, SameJudo |
| 5 | Hanna KOZŁOWSKA, UKS Jasiołec |
| 5 | Iga JACZEWSKA, SameJudo |
| 7 | Ewa PIASECKA, UKJ Legion Zamoś |
| 7 | Maria STEĆ, SameJudo |

# Judo Open Tomczak Cup 25.10.2026 Modliborzyce FU11-38

## Competitors

Competitors: 5

| # | Name | Club | 1 | 2 | 3 | 4 | 5 | Wins | Pts | Pos |
|---|---|---|---|---|---|---|---|---|---|---|
| 1 | Gabriela DOMAŃSKA | Bushidan JUDO | | 100 | 100 | 0 | 10 | 3 | 210 | 2 |
| 2 | Gabriela SMAGAŁA | Judo Tereszpol | 0 | | 0 | 0 | 0 | 0 | 0 | 5 |
| 3 | Maja KOTWICA | Judo Team Modliborzyce | 0 | 100 | | 0 | 0 | 1 | 110 | 4 |
| 4 | Jagoda GURGACZ | UKS Jasiołeczka | 100 | 100 | 100 | | 100 | 4 | 400 | 1 |
| 5 | Oliwia FIGIEL | SameJudo | 0 | 100 | 100 | 0 | | 2 | 202 | 3 |

## Matches

| Match | White | | | Blue | Result | Time |
|---|---|---|---|---|---|---|
| 1 | **Jagoda GURGACZ** | 4 | 5 | Oliwia FIGIEL | 100-001 | 0:56 |
| 2 | **Gabriela DOMAŃSKA** | 1 | 2 | Gabriela SMAGAŁA | 100-000 | 0:35 |
| 3 | Maja KOTWICA | 3 | 4 | **Jagoda GURGACZ** | 000-110 | 1:18 |
| 4 | **Gabriela DOMAŃSKA** | 1 | 5 | Oliwia FIGIEL | 012-002 | 2:29 |
| 5 | Gabriela SMAGAŁA | 2 | 3 | **Maja KOTWICA** | 000-100 | 0:53 |
| 6 | Gabriela DOMAŃSKA | 1 | 4 | **Jagoda GURGACZ** | 000-100 | 0:12 |
| 7 | Maja KOTWICA | 3 | 5 | **Oliwia FIGIEL** | 000-100 | 0:17 |
| 8 | Gabriela SMAGAŁA | 2 | 4 | **Jagoda GURGACZ** | 000-100 | 0:10 |
| 9 | **Gabriela DOMAŃSKA** | 1 | 3 | Maja KOTWICA | 111-010 | 1:52 |
| 10 | Gabriela SMAGAŁA | 2 | 5 | **Oliwia FIGIEL** | 000-100 | 0:14 |

## Results

| Pos | Name |
|---|---|
| 1 | Jagoda GURGACZ, UKS Jasiołeczka |
| 2 | Gabriela DOMAŃSKA, Bushidan JUDO |
| 3 | Oliwia FIGIEL, SameJudo |
| 4 | Maja KOTWICA, Judo Team Modliborzyce |
| 5 | Gabriela SMAGAŁA, Judo Tereszpol |

# Judo Open Tomczak Cup 25.10.2026 Modliborzyce FU11-41

## Competitors

Competitors: 4

| # | Name | Club | 1 | 2 | 3 | 4 | Wins | Pts | Pos |
|---|---|---|---|---|---|---|---|---|---|
| 1 | Milena MAMCARZ | Judo Tereszpol | | 0 | 0 | 0 | 0 | 0 | 4 |
| 2 | Lena LUDIAN | Judo Team Modliborzyce | 100 | | 100 | 0 | 2 | 200 | 2 |
| 3 | Małgorzata STROJEK | MULKS T-O Radzyń Podlaski | 100 | 0 | | 0 | 1 | 100 | 3 |
| 4 | Daria GAZDA | Skorpion judo Krosno | 100 | 100 | 100 | | 3 | 300 | 1 |

## Matches

| Match | White | | | Blue | Result | Time |
|---|---|---|---|---|---|---|
| 1 | Milena MAMCARZ | 1 | 2 | **Lena LUDIAN** | 000-100 | 0:10 |
| 2 | Małgorzata STROJEK | 3 | 4 | **Daria GAZDA** | 000-100 | 0:11 |
| 3 | Milena MAMCARZ | 1 | 3 | **Małgorzata STROJEK** | 000-100 | 0:19 |
| 4 | Lena LUDIAN | 2 | 4 | **Daria GAZDA** | 000-100 | 0:28 |
| 5 | Milena MAMCARZ | 1 | 4 | **Daria GAZDA** | 000-100 | 0:07 |
| 6 | **Lena LUDIAN** | 2 | 3 | Małgorzata STROJEK | 100-000 | 0:08 |

## Results

| Pos | Name |
|---|---|
| 1 | Daria GAZDA, Skorpion judo Krosno |
| 2 | Lena LUDIAN, Judo Team Modliborzyce |
| 3 | Małgorzata STROJEK, MULKS T-O Radzyń Podlaski |
| 4 | Milena MAMCARZ, Judo Tereszpol |

# Judo Open Tomczak Cup 25.10.2026 Modliborzyce FU11-48

## Competitors

Competitors: 5

| # | Name | Club | 1 | 2 | 3 | 4 | 5 | Wins | Pts | Pos |
|---|---|---|---|---|---|---|---|---|---|---|
| 1 | Milena KAMIŃSKA | Judo Team Modliborzyce | | 100 | 100 | 100 | 100 | 4 | 400 | 1 |
| 2 | Agata MALCZYK | SameJudo | 0 | | 100 | 1 | 100 | 3 | 201 | 2 |
| 3 | Hanna PEŁKA | Akademia Judo PERUN | 0 | 0 | | 0 | 100 | 1 | 100 | 4 |
| 4 | Alicja BUCZKOWSKA | JUDO REI ŚWIDNIK | 0 | 0 | 100 | | 100 | 2 | 200 | 3 |
| 5 | Zuzanna KIJAK | Bushidan JUDO | 0 | 0 | 0 | 0 | | 0 | 1 | 5 |

## Matches

| Match | White | | | Blue | Result | Time |
|---|---|---|---|---|---|---|
| 1 | **Alicja BUCZKOWSKA** | 4 | 5 | Zuzanna KIJAK | 102-000 | 1:08 |
| 2 | **Milena KAMIŃSKA** | 1 | 2 | Agata MALCZYK | 110-000 | 0:12 |
| 3 | Hanna PEŁKA | 3 | 4 | **Alicja BUCZKOWSKA** | 000-111 | 1:10 |
| 4 | **Milena KAMIŃSKA** | 1 | 5 | Zuzanna KIJAK | 100-000 | 0:07 |
| 5 | **Agata MALCZYK** | 2 | 3 | Hanna PEŁKA | 100-000 | 0:59 |
| 6 | **Milena KAMIŃSKA** | 1 | 4 | Alicja BUCZKOWSKA | 101-000 | 0:32 |
| 7 | **Hanna PEŁKA** | 3 | 5 | Zuzanna KIJAK | 100-002 | 1:23 |
| 8 | **Agata MALCZYK** | 2 | 4 | Alicja BUCZKOWSKA | 001-000 | 2:00 |
| 9 | **Milena KAMIŃSKA** | 1 | 3 | Hanna PEŁKA | 110-000 | 0:18 |
| 10 | **Agata MALCZYK** | 2 | 5 | Zuzanna KIJAK | 100-000 | 0:21 |

## Results

| Pos | Name |
|---|---|
| 1 | Milena KAMIŃSKA, Judo Team Modliborzyce |
| 2 | Agata MALCZYK, SameJudo |
| 3 | Alicja BUCZKOWSKA, JUDO REI ŚWIDNIK |
| 4 | Hanna PEŁKA, Akademia Judo PERUN |
| 5 | Zuzanna KIJAK, Bushidan JUDO |

# Judo Open Tomczak Cup 25.10.2026 Modliborzyce FU11+48

## Competitors

Competitors: 3

| # | Name | Club | 1 | 2 | 3 | Wins | Pts | Pos |
|---|---|---|---|---|---|---|---|---|
| 1 | Julia KAWKA | SameJudo | | ½ | 0 | 1 | 0½ | 2 |
| 2 | Michalina PLEWCZYŃSKA | SameJudo | 0 | | 0 | 0 | 0 | 3 |
| 3 | Lena FLIS | Judo Team Modliborzyce | 100 | 100 | | 2 | 200 | 1 |

## Matches

| Match | White | | | Blue | Result | Time |
|---|---|---|---|---|---|---|
| 1 | **Julia KAWKA** | 1 | 2 | Michalina PLEWCZYŃSKA | 000s2-000s2 | 1:00 |
| 2 | Julia KAWKA | 1 | 3 | **Lena FLIS** | 000-100 | 0:05 |
| 3 | Michalina PLEWCZYŃSKA | 2 | 3 | **Lena FLIS** | 000-100 | 0:06 |

## Results

| Pos | Name |
|---|---|
| 1 | Lena FLIS, Judo Team Modliborzyce |
| 2 | Julia KAWKA, SameJudo |
| 3 | Michalina PLEWCZYŃSKA, SameJudo |

# Judo Open Tomczak Cup 25.10.2026 Modliborzyce MU11-27

## Competitors A

Competitors: 8

| # | Name | Club | 1 | 2 | 3 | 4 | Wins | Pts | Pos |
|---|---|---|---|---|---|---|---|---|---|
| 1 | Konstanty CHRÓSTOWSKI | SameJudo | X | | | 100 | 1 | 102 | 3 |
| 2 | Jakub WÓJCIK | UKJ Millenium Rzeszów | 100 | X | 100 | 100 | 3 | 300 | 1 |
| 3 | Antoni KRUCZEK | HAYATE Judo | 10 | | X | 100 | 2 | 110 | 2 |
| 4 | Ksawery SYTA | Bushidan JUDO | | | | X | 0 | 0 | 4 |

## Matches A

| Match | White | | | Blue | Result | Time |
|---|---|---|---|---|---|---|
| 1 | Konstanty CHRÓSTOWSKI | 1 | 2 | **Jakub WÓJCIK** | 001-110 | 1:50 |
| 3 | **Antoni KRUCZEK** | 3 | 4 | Ksawery SYTA | 100-000 | 0:18 |
| 5 | Konstanty CHRÓSTOWSKI | 1 | 3 | **Antoni KRUCZEK** | 002-010 | 2:00 |
| 7 | **Jakub WÓJCIK** | 2 | 4 | Ksawery SYTA | 100-000 | 0:22 |
| 9 | **Konstanty CHRÓSTOWSKI** | 1 | 4 | Ksawery SYTA | 100-000 | 0:09 |
| 11 | **Jakub WÓJCIK** | 2 | 3 | Antoni KRUCZEK | 100-000 | 1:01 |

## Competitors B

| # | Name | Club | 5 | 6 | 7 | 8 | Wins | Pts | Pos |
|---|---|---|---|---|---|---|---|---|---|
| 5 | Tymoteusz HABER | SameJudo | X | | | 100 | 1 | 101 | 3 |
| 6 | Krystian CHMIEL | HAYATE Judo | 100 | X | 100 | 100 | 3 | 300 | 1 |
| 7 | Franciszek GÓŹDŹ | Mōtā Lublin Judo | 100 | | X | 100 | 2 | 210 | 2 |
| 8 | Jan PYRZ | JUDO REI ŚWIDNIK | | | | X | 0 | 0 | 4 |

## Matches A

| Match | White | | | Blue | Result | Time |
|---|---|---|---|---|---|---|
| 2 | Tymoteusz HABER | 5 | 6 | **Krystian CHMIEL** | 000-100 | 0:20 |
| 4 | **Franciszek GÓŹDŹ** | 7 | 8 | Jan PYRZ | 100-000 | 0:10 |
| 6 | Tymoteusz HABER | 5 | 7 | **Franciszek GÓŹDŹ** | 001-110 | 1:09 |
| 8 | **Krystian CHMIEL** | 6 | 8 | Jan PYRZ | 100-000 | 0:19 |
| 10 | **Tymoteusz HABER** | 5 | 8 | Jan PYRZ | 101-000 | 1:03 |
| 12 | **Krystian CHMIEL** | 6 | 7 | Franciszek GÓŹDŹ | 100-010 | 1:12 |

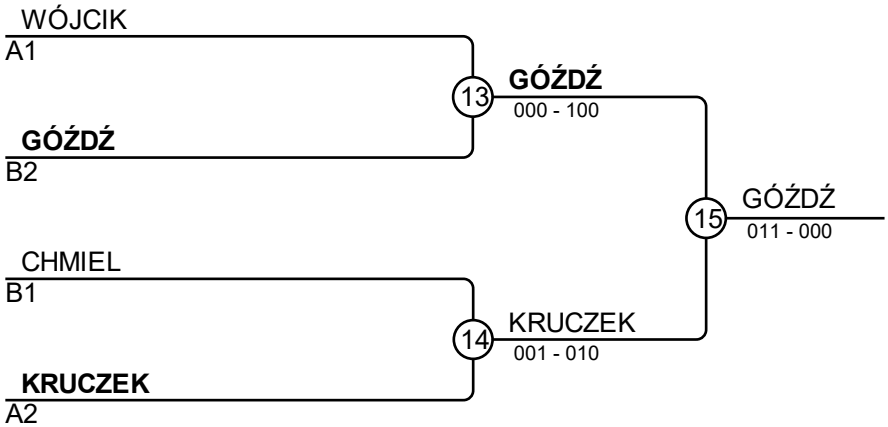


## Results

| Pos | Name |
|---|---|
| 1 | Franciszek GÓŹDŹ, Mōtā Lublin Judo |
| 2 | Antoni KRUCZEK, HAYATE Judo |
| 3 | Jakub WÓJCIK, UKJ Millenium Rzeszów |
| 3 | Krystian CHMIEL, HAYATE Judo |

# Judo Open Tomczak Cup 25.10.2026 Modliborzyce MU11-30

Competitors: 18

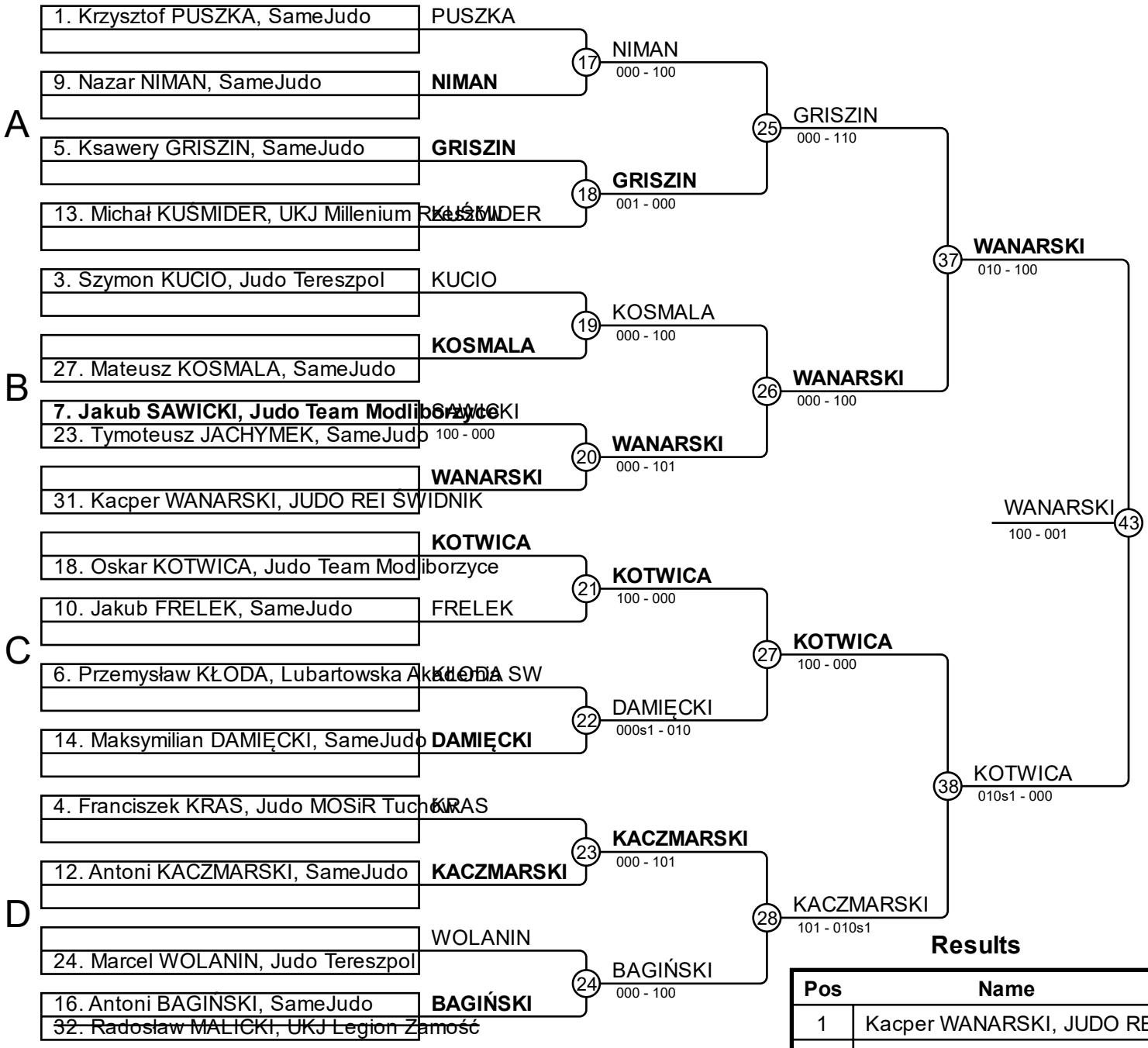


## Results

| Pos | Name |
|---|---|
| 1 | Kacper WANARSKI, JUDO REI ŚWI |
| 2 | Oskar KOTWICA, Judo Team Modlib |
| 3 | Antoni KACZMARSKI, SameJudo |
| 3 | Ksawery GRISZIN, SameJudo |
| 5 | Nazar NIMAN, SameJudo |
| 5 | Franciszek KRAS, Judo MOSiR Tuch |
| 7 | Mateusz KOSMALA, SameJudo |
| 7 | Maksymilian DAMIĘCKI, SameJudo |

# Judo Open Tomczak Cup 25.10.2026 Modliborzyce MU11-33

Competitors: 18

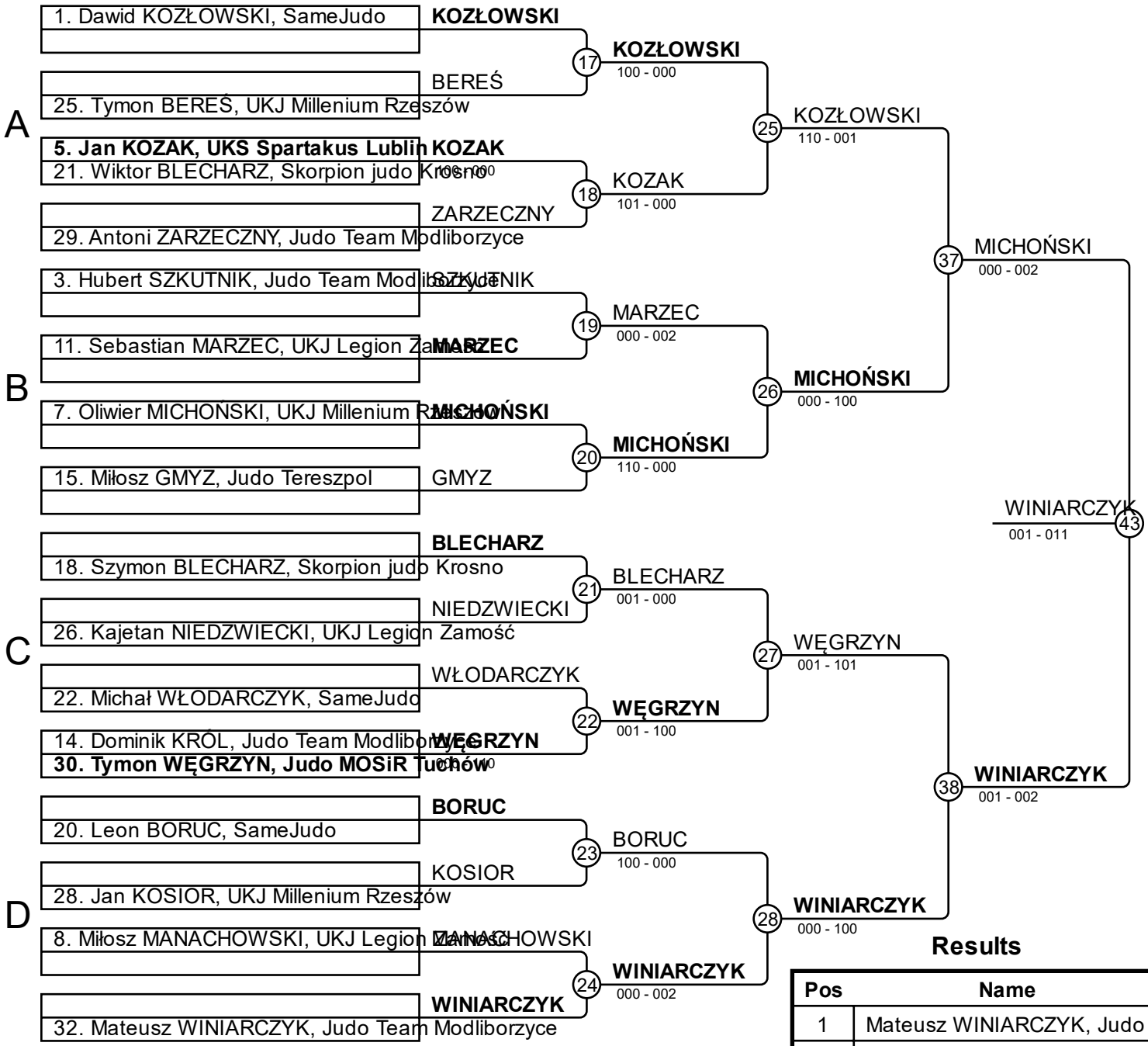


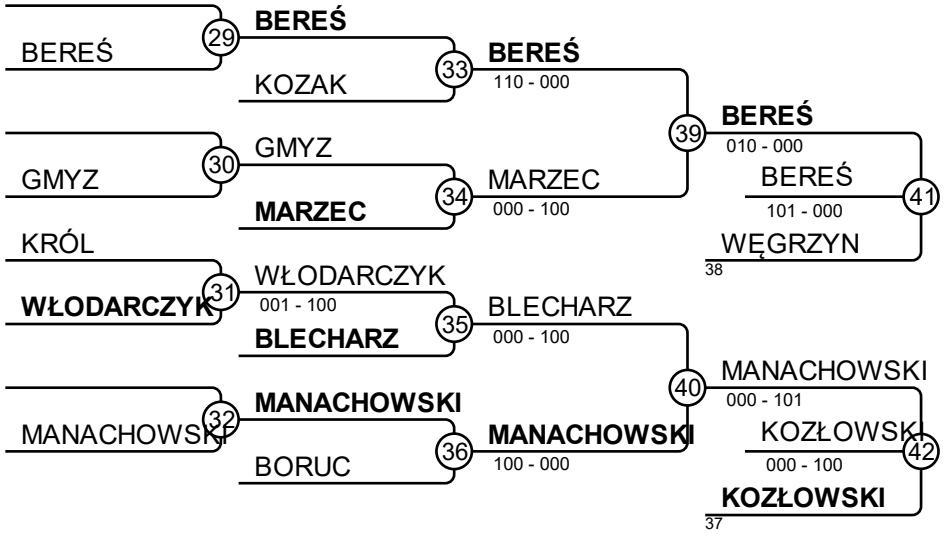


## Results

| Pos | Name |
|---|---|
| 1 | Mateusz WINIARCZYK, Judo Team |
| 2 | Oliwier MICHOŃSKI, UKJ Millenium R |
| 3 | Tymon BEREŚ, UKJ Millenium Rzesz |
| 3 | Dawid KOZŁOWSKI, SameJudo |
| 5 | Tymon WĘGRZYN, Judo MOSiR Tuc |
| 5 | Miłosz MANACHOWSKI, UKJ Legion |
| 7 | Sebastian MARZEC, UKJ Legion Za |
| 7 | Szymon BLECHARZ, Skorpion judo |

# Judo Open Tomczak Cup 25.10.2026 Modliborzyce MU11-36

Competitors: 15

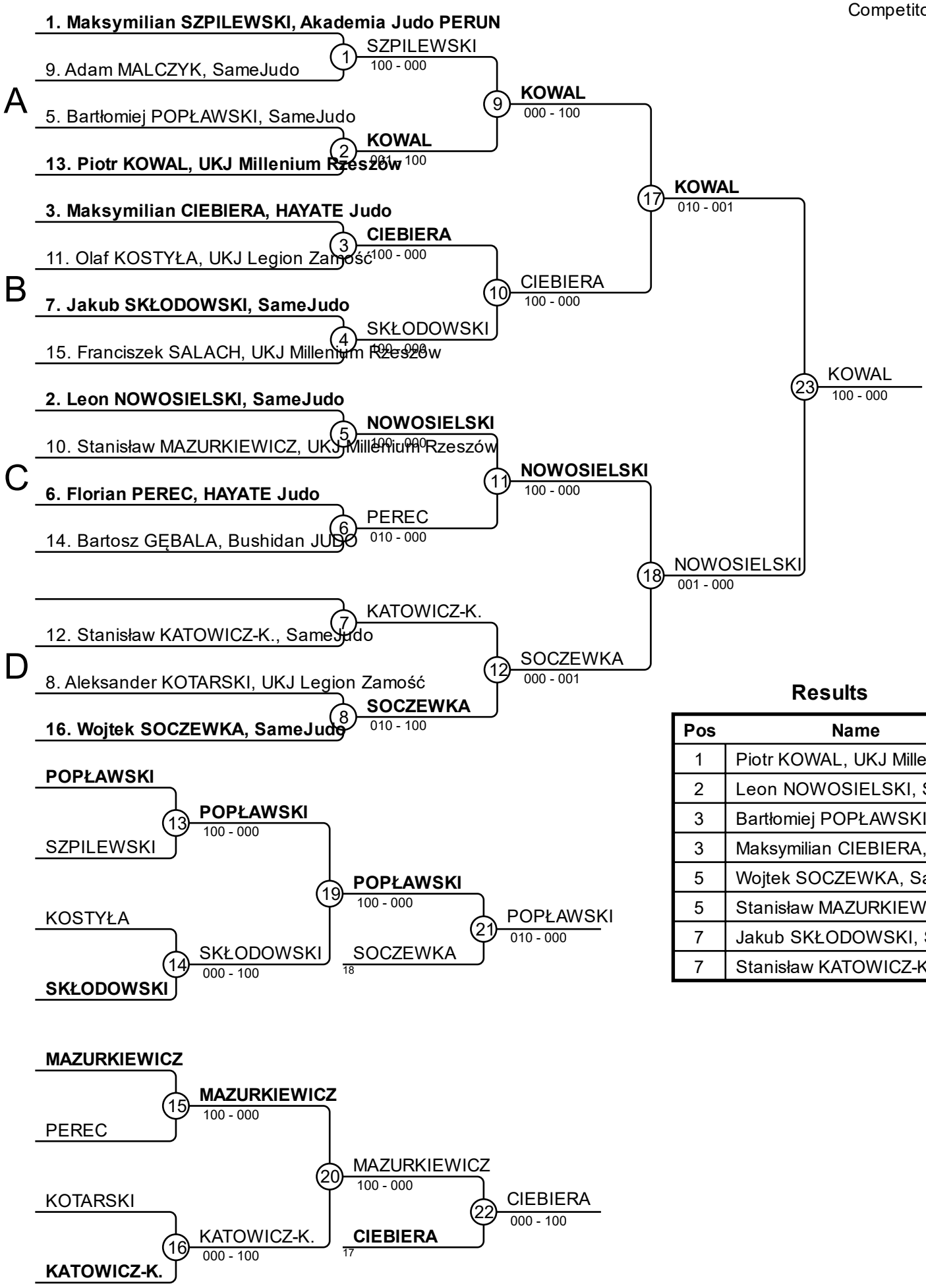


## Results

| Pos | Name |
|---|---|
| 1 | Piotr KOWAL, UKJ Millenium Rzeszó |
| 2 | Leon NOWOSIELSKI, SameJudo |
| 3 | Bartłomiej POPŁAWSKI, SameJudo |
| 3 | Maksymilian CIEBIERA, HAYATE Juc |
| 5 | Wojtek SOCZEWKA, SameJudo |
| 5 | Stanisław MAZURKIEWICZ, UKJ Mill |
| 7 | Jakub SKŁODOWSKI, SameJudo |
| 7 | Stanisław KATOWICZ-K., SameJudo |

# Judo Open Tomczak Cup 25.10.2026 Modliborzyce MU11-39

Competitors: 12

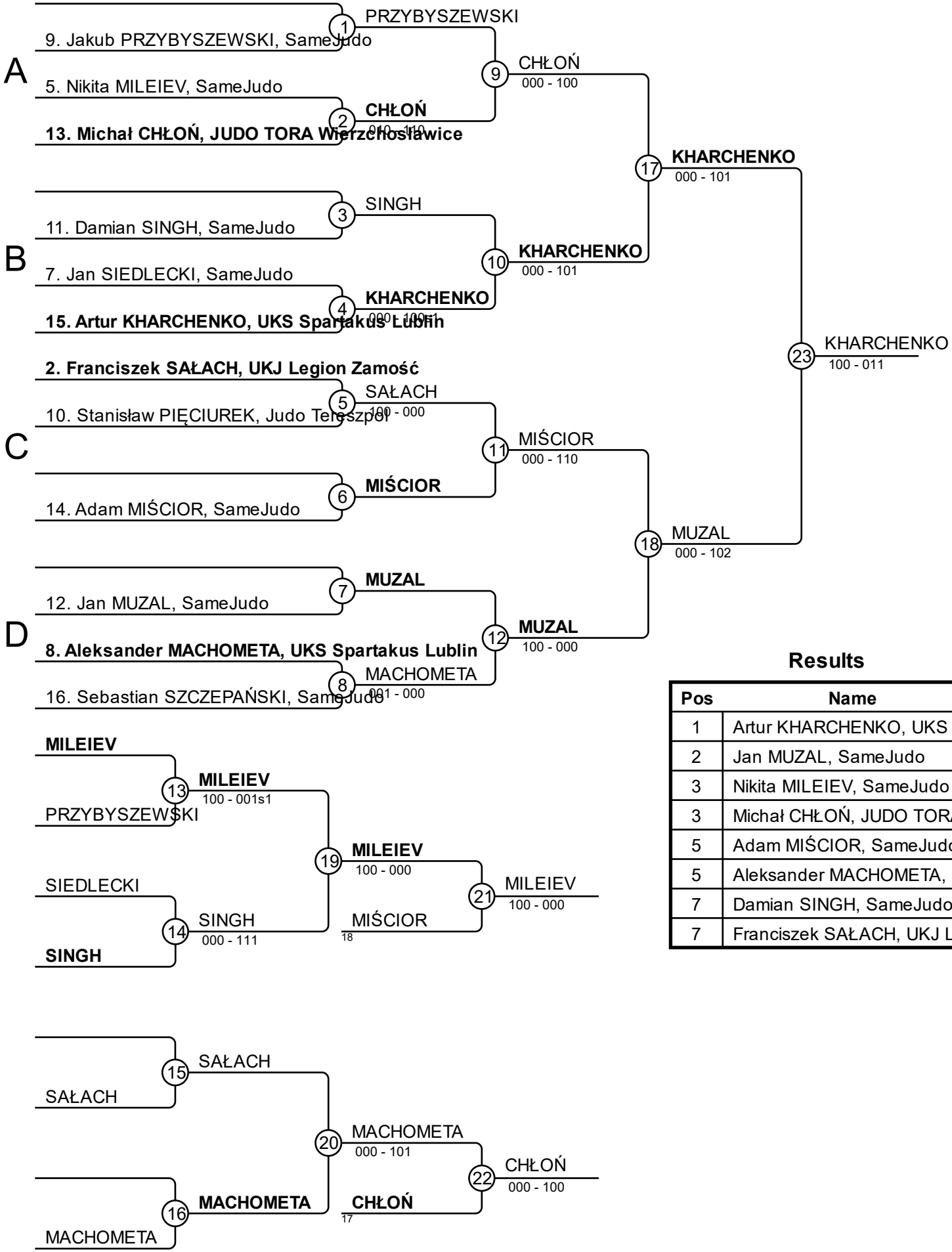


## Results

| Pos | Name |
|---|---|
| 1 | Artur KHARCHENKO, UKS Spartaku |
| 2 | Jan MUZAL, SameJudo |
| 3 | Nikita MILEIEV, SameJudo |
| 3 | Michał CHŁOŃ, JUDO TORA Wierzch |
| 5 | Adam MIŚCIOR, SameJudo |
| 5 | Aleksander MACHOMETA, UKS Spa |
| 7 | Damian SINGH, SameJudo |
| 7 | Franciszek SAŁACH, UKJ Legion Za |

# Judo Open Tomczak Cup 25.10.2026 Modliborzyce MU11-42

## Competitors A

Competitors: 8

| # | Name | Club | 1 | 2 | 3 | 4 | Wins | Pts | Pos |
|---|---|---|---|---|---|---|---|---|---|
| 1 | Ivo SOSTOK | SameJudo | X | 100 | | | 1 | 100 | 3 |
| 2 | Dawid STARTEK | Judo Team Modliborzyce | | X | | | 0 | 0 | 4 |
| 3 | Daniel GIRNDT | UKS Judo KONTRA | 100 | 100 | X | | 2 | 200 | 2 |
| 4 | Kacper ZALEWSKI | SameJudo | 100 | 100 | 100 | X | 3 | 300 | 1 |

## Matches A

| Match | White | | | Blue | Result | Time |
|---|---|---|---|---|---|---|
| 1 | **Ivo SOSTOK** | 1 | 2 | Dawid STARTEK | 100-000 | 0:47 |
| 3 | Daniel GIRNDT | 3 | 4 | **Kacper ZALEWSKI** | 000-100 | 0:09 |
| 5 | Ivo SOSTOK | 1 | 3 | **Daniel GIRNDT** | 000-100 | 0:56 |
| 7 | Dawid STARTEK | 2 | 4 | **Kacper ZALEWSKI** | 000-100 | 0:07 |
| 9 | Ivo SOSTOK | 1 | 4 | **Kacper ZALEWSKI** | 000-110 | 0:45 |
| 11 | Dawid STARTEK | 2 | 3 | **Daniel GIRNDT** | 000-100 | 0:31 |

## Competitors B

| # | Name | Club | 5 | 6 | 7 | 8 | Wins | Pts | Pos |
|---|---|---|---|---|---|---|---|---|---|
| 5 | Marcel GAJOWNICZEK | Lubartowska Akademia SW | X | 100 | 100 | 100 | 3 | 300 | 1 |
| 6 | Stanisław SĄGOL | SameJudo | | X | | 100 | 1 | 110 | 3 |
| 7 | Wiktor SZYSZKA | HAYATE Judo | | 100 | X | 100 | 2 | 200 | 2 |
| 8 | Patryk ZATORSKI | SameJudo | | | | X | 0 | 0 | 4 |

## Matches A

| Match | White | | | Blue | Result | Time |
|---|---|---|---|---|---|---|
| 2 | **Marcel GAJOWNICZEK** | 5 | 6 | Stanisław SĄGOL | 102-011 | 3:00 |
| 4 | **Wiktor SZYSZKA** | 7 | 8 | Patryk ZATORSKI | 100-000 | 0:12 |
| 6 | **Marcel GAJOWNICZEK** | 5 | 7 | Wiktor SZYSZKA | 100-000 | 1:11 |
| 8 | **Stanisław SĄGOL** | 6 | 8 | Patryk ZATORSKI | 100-000 | 0:09 |
| 10 | **Marcel GAJOWNICZEK** | 5 | 8 | Patryk ZATORSKI | 100-000 | 0:12 |
| 12 | Stanisław SĄGOL | 6 | 7 | **Wiktor SZYSZKA** | 000-102 | 1:32 |

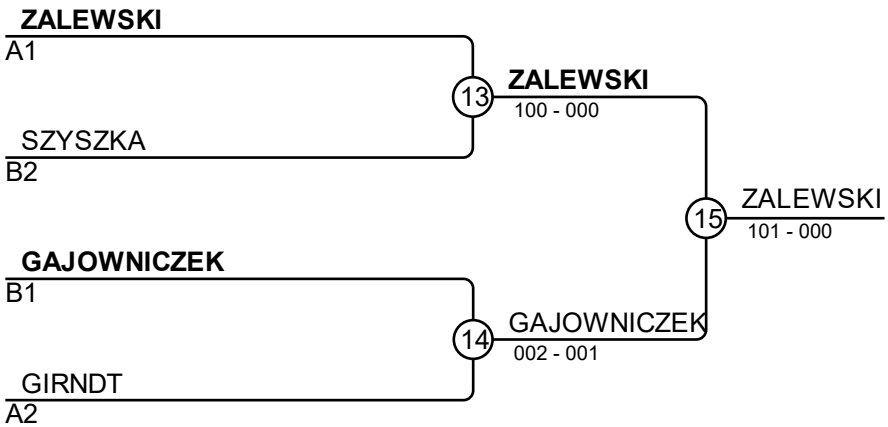


## Results

| Pos | Name |
|---|---|
| 1 | Kacper ZALEWSKI, SameJudo |
| 2 | Marcel GAJOWNICZEK, Lubartowska Akademia SW |
| 3 | Wiktor SZYSZKA, HAYATE Judo |
| 3 | Daniel GIRNDT, UKS Judo KONTRA |

# Judo Open Tomczak Cup 25.10.2026 Modliborzyce MU11-46

Competitors: 9

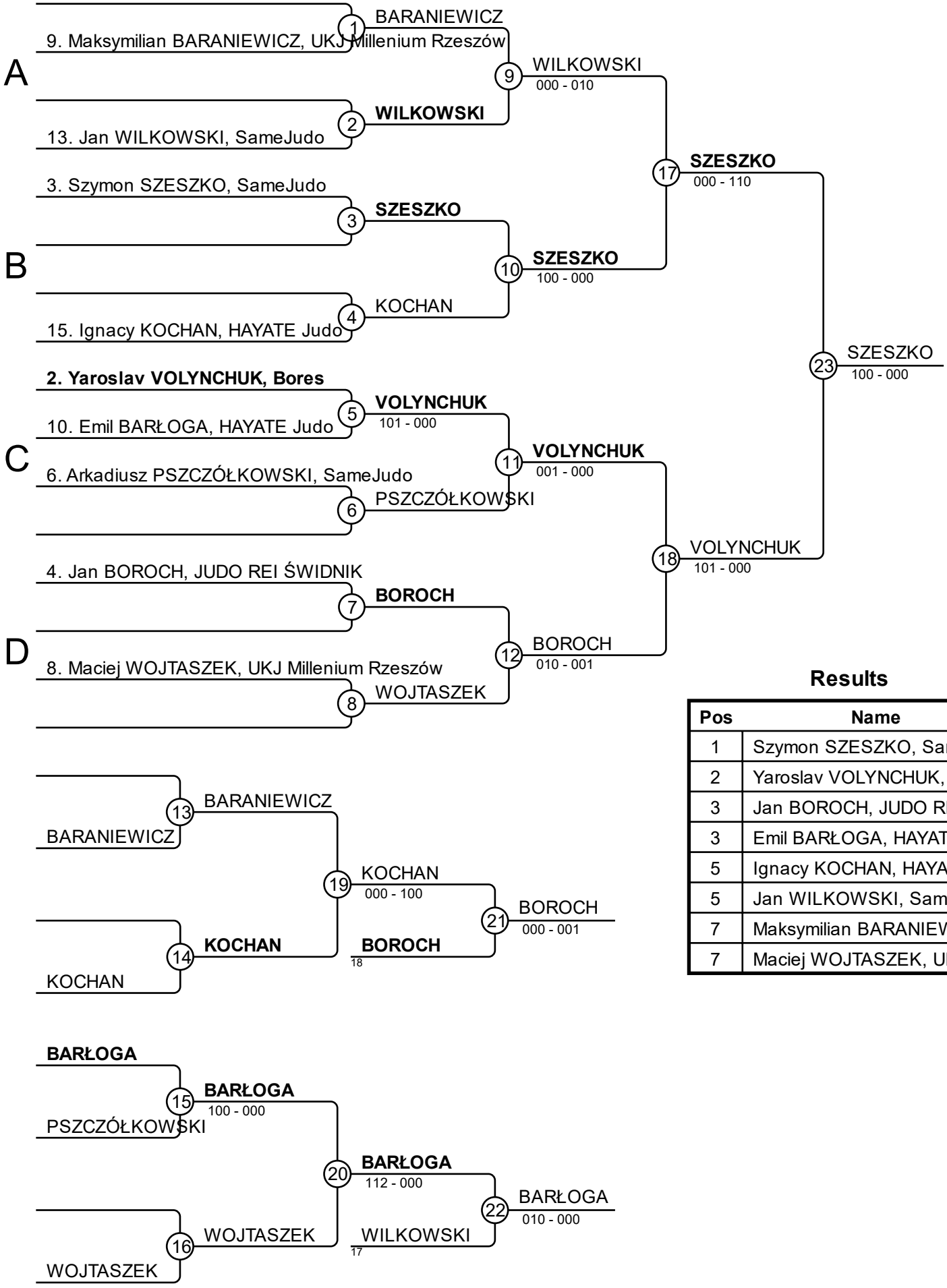


## Results

| Pos | Name |
|---|---|
| 1 | Szymon SZESZKO, SameJudo |
| 2 | Yaroslav VOLYNCHUK, Bores |
| 3 | Jan BOROCH, JUDO REI ŚWIDNIK |
| 3 | Emil BARŁOGA, HAYATE Judo |
| 5 | Ignacy KOCHAN, HAYATE Judo |
| 5 | Jan WILKOWSKI, SameJudo |
| 7 | Maksymilian BARANIEWICZ, UKJ Mi |
| 7 | Maciej WOJTASZEK, UKJ Millenium |

# Judo Open Tomczak Cup 25.10.2026 Modliborzyce MU11-50

## Competitors

Competitors: 3

| # | Name | Club | 1 | 2 | 3 | Wins | Pts | Pos |
|---|---|---|---|---|---|---|---|---|
| 1 | Antoni LUDWINIAK | SameJudo | | 0 | 10 | 1 | 10 | 2 |
| 2 | Aleksander GERLACH | Skorpion judo Krosno | 100 | | 100 | 2 | 200 | 1 |
| 3 | Jan GĘBAL | Bushidan JUDO | 0 | 0 | | 0 | 0 | 3 |

## Matches

| Match | White | | | Blue | Result | Time |
|---|---|---|---|---|---|---|
| 1 | Antoni LUDWINIAK | 1 | 2 | **Aleksander GERLACH** | 000-100 | 0:22 |
| 2 | **Antoni LUDWINIAK** | 1 | 3 | Jan GĘBAL | 010-000s1 | 2:00 |
| 3 | **Aleksander GERLACH** | 2 | 3 | Jan GĘBAL | 100-000 | 0:19 |

## Results

| Pos | Name |
|---|---|
| 1 | Aleksander GERLACH, Skorpion judo Krosno |
| 2 | Antoni LUDWINIAK, SameJudo |
| 3 | Jan GĘBAL, Bushidan JUDO |

# Judo Open Tomczak Cup 25.10.2026 Modliborzyce MU11-55

## Competitors

Competitors: 2

| # | Name | Club | 1 | 2 | 1 | 2 | 1 | 2 | Wins | Pts | Pos |
|---|---|---|---|---|---|---|---|---|---|---|---|
| 1 | Julian ADAMCZYK | Mōtā Lublin Judo | | 100 | | 100 | | | 2 | 200 | 1 |
| 2 | Kordian OSTROWSKI | UKJ Millenium Rzeszów | 0 | | 0 | | | | 0 | 0 | 2 |

## Matches

| Match | White | | | Blue | Result | Time |
|---|---|---|---|---|---|---|
| 1 | **Julian ADAMCZYK** | 1 | 2 | Kordian OSTROWSKI | 100-000 | 0:05 |
| 2 | **Julian ADAMCZYK** | 1 | 2 | Kordian OSTROWSKI | 100-000 | 0:43 |
| 3 | Julian ADAMCZYK | 1 | 2 | Kordian OSTROWSKI | | |

## Results

| Pos | Name |
|---|---|
| 1 | Julian ADAMCZYK, Mōtā Lublin Judo |
| 2 | Kordian OSTROWSKI, UKJ Millenium Rzeszów |

# Judo Open Tomczak Cup 25.10.2026 Modliborzyce MU11-60

## Competitors

Competitors: 2

| # | Name | Club | 1 | 2 | 1 | 2 | 1 | 2 | Wins | Pts | Pos |
|---|---|---|---|---|---|---|---|---|---|---|---|
| 1 | Oskar KOWALCZYK | Bushidan JUDO | | 100 | | 100 | | | 2 | 200 | 1 |
| 2 | Wojtek WOLIŃSKI | Akademia Judo PERUN | 0 | | 0 | | | | 0 | 0 | 2 |

## Matches

| Match | White | | | Blue | Result | Time |
|---|---|---|---|---|---|---|
| 1 | **Oskar KOWALCZYK** | 1 | 2 | Wojtek WOLIŃSKI | 100-000 | 0:23 |
| 2 | **Oskar KOWALCZYK** | 1 | 2 | Wojtek WOLIŃSKI | 101-000 | 1:02 |
| 3 | Oskar KOWALCZYK | 1 | 2 | Wojtek WOLIŃSKI | | |

## Results

| Pos | Name |
|---|---|
| 1 | Oskar KOWALCZYK, Bushidan JUDO |
| 2 | Wojtek WOLIŃSKI, Akademia Judo PERUN |

# Judo Open Tomczak Cup 25.10.2026 Modliborzyce MU11+60

## Competitors

Competitors: 1

| # | Name | Club | 1 | Wins | Pts | Pos |
|---|---|---|---|---|---|---|
| 1 | Fabian KOZIOŁ | Judo MOSiR Tuchów | | 0 | 0 | 1 |

## Matches

| Match | White | Blue | Result | Time |
|---|---|---|---|---|

## Results

| Pos | Name |
|---|---|
| 1 | Fabian KOZIOŁ, Judo MOSiR Tuchów |

# Judo Open Tomczak Cup 25.10.2026 Modliborzyce FU13-33

## Competitors

Competitors: 2

| # | Name | Club | 1 | 2 | 1 | 2 | 1 | 2 | Wins | Pts | Pos |
|---|---|---|---|---|---|---|---|---|---|---|---|
| 1 | Solomia DENYSEVYCH | Kolos Lutsk | | 0 | | 0 | | | 0 | 0 | 2 |
| 2 | Amanda MŁYNARSKA | UKS Spartakus Lublin | 100 | | 100 | | | | 2 | 200 | 1 |

## Matches

| Match | White | | | Blue | Result | Time |
|---|---|---|---|---|---|---|
| 1 | Solomia DENYSEVYCH | 1 | 2 | **Amanda MŁYNARSKA** | 000-111 | 0:36 |
| 2 | Solomia DENYSEVYCH | 1 | 2 | **Amanda MŁYNARSKA** | 000-100 | 0:05 |
| 3 | Solomia DENYSEVYCH | 1 | 2 | Amanda MŁYNARSKA | | |

## Results

| Pos | Name |
|---|---|
| 1 | Amanda MŁYNARSKA, UKS Spartakus Lublin |
| 2 | Solomia DENYSEVYCH, Kolos Lutsk |

# Judo Open Tomczak Cup 25.10.2026 Modliborzyce FU13-36

## Competitors A

Competitors: 6

| # | Name | Club | 1 | 2 | 3 | Wins | Pts | Pos |
|---|---|---|---|---|---|---|---|---|
| 1 | Zuzanna GIERADA | UMKS Ostrowia | X | 100 | | 1 | 100 | 2 |
| 2 | Aleksandra STRĘCIWILK | Judo Team Modliborzyce | | X | | 0 | 1 | 3 |
| 3 | Urszula GLAZER | Skorpion judo Krosno | 100 | 100 | X | 2 | 200 | 1 |

## Matches A

| Match | White | | | Blue | Result | Time |
|---|---|---|---|---|---|---|
| 1 | **Zuzanna GIERADA** | 1 | 2 | Aleksandra STRĘCIWILK | 100-000 | 1:17 |
| 3 | Zuzanna GIERADA | 1 | 3 | **Urszula GLAZER** | 000-100 | 1:36 |
| 5 | Aleksandra STRĘCIWILK | 2 | 3 | **Urszula GLAZER** | 001-101 | 1:31 |

## Competitors B

| # | Name | Club | 4 | 5 | 6 | Wins | Pts | Pos |
|---|---|---|---|---|---|---|---|---|
| 4 | Liliana RUDNICKA | Judo Team Modliborzyce | X | | | 0 | 0 | 3 |
| 5 | Amelia PIĘCIUREK | Judo Tereszpol | 10 | X | | 1 | 10 | 2 |
| 6 | Hanna DEC | UKJ Millenium Rzeszów | 100 | 100 | X | 2 | 200 | 1 |

## Matches A

| Match | White | | | Blue | Result | Time |
|---|---|---|---|---|---|---|
| 2 | Liliana RUDNICKA | 4 | 5 | **Amelia PIĘCIUREK** | 000s1-010 | 2:00 |
| 4 | Liliana RUDNICKA | 4 | 6 | **Hanna DEC** | 000-100 | 0:06 |
| 6 | Amelia PIĘCIUREK | 5 | 6 | **Hanna DEC** | 000-100 | 0:40 |

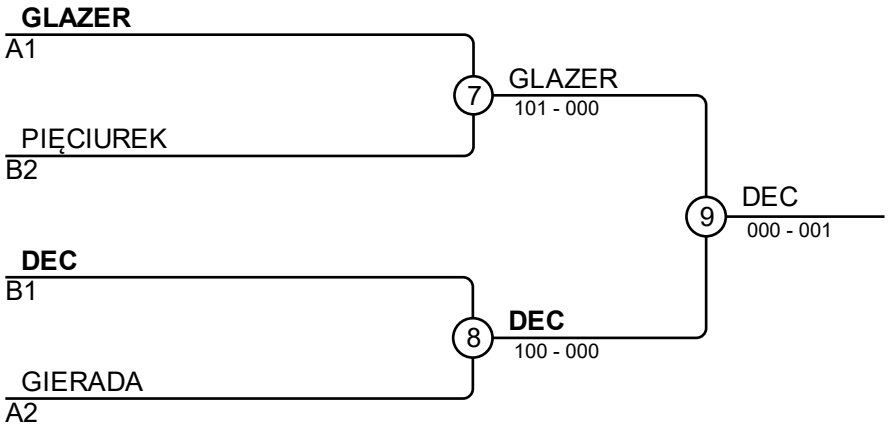


## Results

| Pos | Name |
|---|---|
| 1 | Hanna DEC, UKJ Millenium Rzeszów |
| 2 | Urszula GLAZER, Skorpion judo Krosno |
| 3 | Amelia PIĘCIUREK, Judo Tereszpol |
| 3 | Zuzanna GIERADA, UMKS Ostrowia |

# Judo Open Tomczak Cup 25.10.2026 Modliborzyce FU13-40

## Competitors

Competitors: 4

| # | Name | Club | 1 | 2 | 3 | 4 | Wins | Pts | Pos |
|---|---|---|---|---|---|---|---|---|---|
| 1 | Karina ŚWIĘTNICKA | UKS Jasiołeczka | | 0 | 100 | 0 | 1 | 100 | 3 |
| 2 | Oliwia SIKORA | Bushidan JUDO | 100 | | 100 | 100 | 3 | 300 | 1 |
| 3 | Amelia CUP | Judo MOSiR Tuchów | 0 | 0 | | 0 | 0 | 0 | 4 |
| 4 | Emilia MICHOŃSKA | UKJ Millenium Rzeszów | 100 | 0 | 100 | | 2 | 200 | 2 |

## Matches

| Match | White | | | Blue | Result | Time |
|---|---|---|---|---|---|---|
| 1 | Karina ŚWIĘTNICKA | 1 | 2 | **Oliwia SIKORA** | 000-100 | 1:10 |
| 2 | Amelia CUP | 3 | 4 | **Emilia MICHOŃSKA** | 000-101 | 0:42 |
| 3 | **Karina ŚWIĘTNICKA** | 1 | 3 | Amelia CUP | 102-000 | 1:11 |
| 4 | **Oliwia SIKORA** | 2 | 4 | Emilia MICHOŃSKA | 100-000 | 0:58 |
| 5 | Karina ŚWIĘTNICKA | 1 | 4 | **Emilia MICHOŃSKA** | 000-100 | 0:20 |
| 6 | **Oliwia SIKORA** | 2 | 3 | Amelia CUP | 111-000 | 0:30 |

## Results

| Pos | Name |
|---|---|
| 1 | Oliwia SIKORA, Bushidan JUDO |
| 2 | Emilia MICHOŃSKA, UKJ Millenium Rzeszów |
| 3 | Karina ŚWIĘTNICKA, UKS Jasiołeczka |
| 4 | Amelia CUP, Judo MOSiR Tuchów |

# Judo Open Tomczak Cup 25.10.2026 Modliborzyce FU13-44

## Competitors A

Competitors: 7

| # | Name | Club | 1 | 2 | 3 | 4 | Wins | Pts | Pos |
|---|---|---|---|---|---|---|---|---|---|
| 1 | GABRIELA PAJĄK | UMKS Ostrowia | X | | 100 | | 1 | 100 | 3 |
| 2 | Paulina KRZYSZTOŃ | Judo Team Modliborzyce | 10 | X | 100 | 100 | 3 | 210 | 1 |
| 3 | Alicja ZABIELSKA | Bushidan JUDO | | | X | | 0 | 0 | 4 |
| 4 | Olha BILETSKA | Kolos Lutsk | 100 | | 100 | X | 2 | 210 | 2 |

## Matches A

| Match | White | | | Blue | Result | Time |
|---|---|---|---|---|---|---|
| 1 | GABRIELA PAJĄK | 1 | 2 | **Paulina KRZYSZTOŃ** | 000s2-011 | 2:00 |
| 2 | Alicja ZABIELSKA | 3 | 4 | **Olha BILETSKA** | 000-100 | 0:05 |
| 4 | **GABRIELA PAJĄK** | 1 | 3 | Alicja ZABIELSKA | 100-000 | 0:25 |
| 5 | **Paulina KRZYSZTOŃ** | 2 | 4 | Olha BILETSKA | 100-010 | 0:43 |
| 7 | GABRIELA PAJĄK | 1 | 4 | **Olha BILETSKA** | 000-100 | 1:58 |
| 8 | **Paulina KRZYSZTOŃ** | 2 | 3 | Alicja ZABIELSKA | 100-000 | 0:06 |

## Competitors B

| # | Name | Club | 5 | 6 | 7 | Wins | Pts | Pos |
|---|---|---|---|---|---|---|---|---|
| 5 | Maja ZACIOS | HAYATE Judo | X | | | 0 | 0 | 3 |
| 6 | Kamila TALAREK | SameJudo | 100 | X | | 1 | 100 | 2 |
| 7 | Zuzanna KOWAL | UKJ Millenium Rzeszów | 100 | 100 | X | 2 | 200 | 1 |

## Matches A

| Match | White | | | Blue | Result | Time |
|---|---|---|---|---|---|---|
| 3 | Maja ZACIOS | 5 | 6 | **Kamila TALAREK** | 000-101 | 0:34 |
| 6 | Maja ZACIOS | 5 | 7 | **Zuzanna KOWAL** | 000-100 | 0:23 |
| 9 | Kamila TALAREK | 6 | 7 | **Zuzanna KOWAL** | 000-100 | 0:38 |

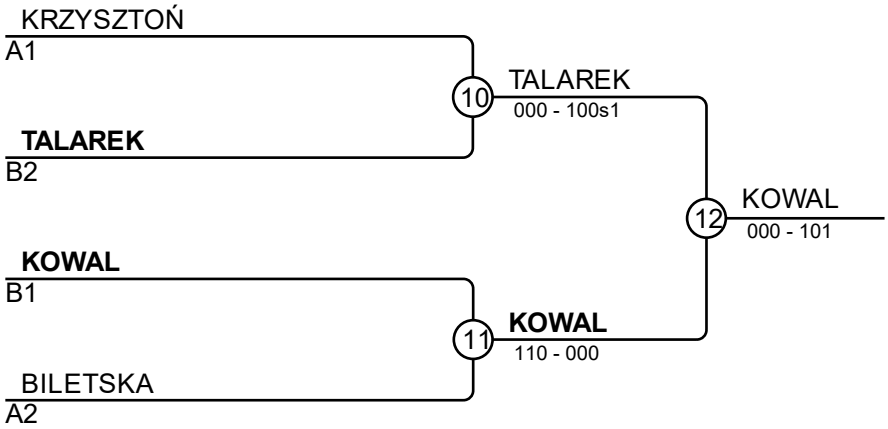


## Results

| Pos | Name |
|---|---|
| 1 | Zuzanna KOWAL, UKJ Millenium Rzeszów |
| 2 | Kamila TALAREK, SameJudo |
| 3 | Paulina KRZYSZTOŃ, Judo Team Modliborzyce |
| 3 | Olha BILETSKA, Kolos Lutsk |

# Judo Open Tomczak Cup 25.10.2026 Modliborzyce FU13-48

## Competitors A

Competitors: 7

| # | Name | Club | 1 | 2 | 3 | 4 | Wins | Pts | Pos |
|---|---|---|---|---|---|---|---|---|---|
| 1 | Nadia WÓJTOWICZ | UKS Jasiołeczka | X | 100 | | | 1 | 100 | 3 |
| 2 | Nikola KRZYSZTOŃ | Judo Team Modliborzyce | | X | | | 0 | 1 | 4 |
| 3 | SONIA WIELDZYK | SameJudo | 1 | 100 | X | | 2 | 101 | 2 |
| 4 | Gabriela HABER | SameJudo | 100 | 100 | 100 | X | 3 | 300 | 1 |

## Matches A

| Match | White | | | Blue | Result | Time |
|---|---|---|---|---|---|---|
| 1 | **Nadia WÓJTOWICZ** | 1 | 2 | Nikola KRZYSZTOŃ | 100-001 | 1:19 |
| 2 | SONIA WIELDZYK | 3 | 4 | **Gabriela HABER** | 000-100 | 0:35 |
| 4 | Nadia WÓJTOWICZ | 1 | 3 | **SONIA WIELDZYK** | 000-001 | 2:16 |
| 5 | Nikola KRZYSZTOŃ | 2 | 4 | **Gabriela HABER** | 000-101 | 0:44 |
| 7 | Nadia WÓJTOWICZ | 1 | 4 | **Gabriela HABER** | 000-100 | 0:38 |
| 8 | Nikola KRZYSZTOŃ | 2 | 3 | **SONIA WIELDZYK** | 000-100 | 0:18 |

## Competitors B

| # | Name | Club | 5 | 6 | 7 | Wins | Pts | Pos |
|---|---|---|---|---|---|---|---|---|
| 5 | Hanna KWIECIŃSKA | SameJudo | X | 100 | 100 | 2 | 200 | 1 |
| 6 | Hanna OKOŃ | SameJudo | | X | 10 | 1 | 10 | 2 |
| 7 | Zofia SZTEJNBIS | Bushidan JUDO | | | X | 0 | 1 | 3 |

## Matches A

| Match | White | | | Blue | Result | Time |
|---|---|---|---|---|---|---|
| 3 | **Hanna KWIECIŃSKA** | 5 | 6 | Hanna OKOŃ | 100-000 | 0:33 |
| 6 | **Hanna KWIECIŃSKA** | 5 | 7 | Zofia SZTEJNBIS | 100-000 | 0:09 |
| 9 | **Hanna OKOŃ** | 6 | 7 | Zofia SZTEJNBIS | 011-001 | 2:00 |

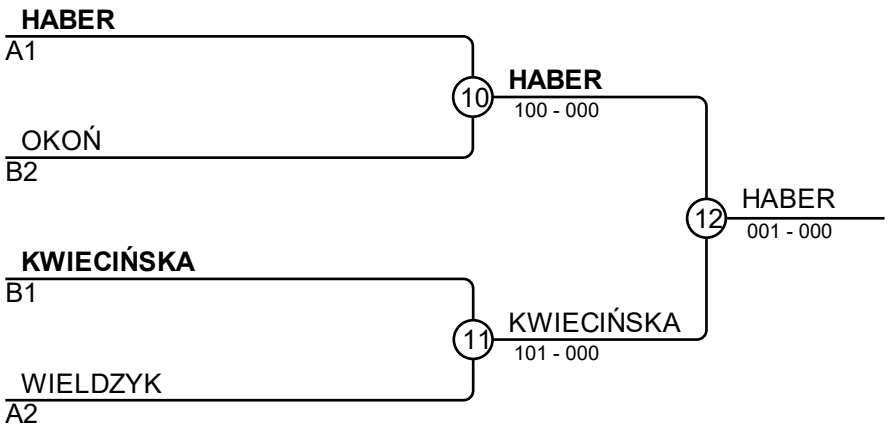


## Results

| Pos | Name |
|---|---|
| 1 | Gabriela HABER, SameJudo |
| 2 | Hanna KWIECIŃSKA, SameJudo |
| 3 | Hanna OKOŃ, SameJudo |
| 3 | SONIA WIELDZYK, SameJudo |

# Judo Open Tomczak Cup 25.10.2026 Modliborzyce FU13-52

## Competitors

Competitors: 2

| # | Name | Club | 1 | 2 | 1 | 2 | 1 | 2 | Wins | Pts | Pos |
|---|---|---|---|---|---|---|---|---|---|---|---|
| 1 | Julia MAZUR | UKS Spartakus Lublin | | 10 | | 100 | | | 2 | 110 | 1 |
| 2 | Alicja ADAMCZYK | JUDO REI ŚWIDNIK | 0 | | 0 | | | | 0 | 1 | 2 |

## Matches

| Match | White | | | Blue | Result | Time |
|---|---|---|---|---|---|---|
| 1 | **Julia MAZUR** | 1 | 2 | Alicja ADAMCZYK | 010-001 | 2:00 |
| 2 | **Julia MAZUR** | 1 | 2 | Alicja ADAMCZYK | 100-000 | 1:16 |
| 3 | Julia MAZUR | 1 | 2 | Alicja ADAMCZYK | | |

## Results

| Pos | Name |
|---|---|
| 1 | Julia MAZUR, UKS Spartakus Lublin |
| 2 | Alicja ADAMCZYK, JUDO REI ŚWIDNIK |

# Judo Open Tomczak Cup 25.10.2026 Modliborzyce FU13-57

## Competitors

Competitors: 2

| # | Name | Club | 1 | 2 | 1 | 2 | 1 | 2 | Wins | Pts | Pos |
|---|---|---|---|---|---|---|---|---|---|---|---|
| 1 | Solomia SANDRYKA | Kolos Lutsk | | 0 | | 0 | | | 0 | 0 | 2 |
| 2 | Maria MYSZAK | Judo Team Modliborzyce | 100 | | 100 | | | | 2 | 200 | 1 |

## Matches

| Match | White | | | Blue | Result | Time |
|---|---|---|---|---|---|---|
| 1 | Solomia SANDRYKA | 1 | 2 | **Maria MYSZAK** | 000-100 | 0:07 |
| 2 | Solomia SANDRYKA | 1 | 2 | **Maria MYSZAK** | 000-111 | 1:27 |
| 3 | Solomia SANDRYKA | 1 | 2 | Maria MYSZAK | | |

## Results

| Pos | Name |
|---|---|
| 1 | Maria MYSZAK, Judo Team Modliborzyce |
| 2 | Solomia SANDRYKA, Kolos Lutsk |

# Judo Open Tomczak Cup 25.10.2026 Modliborzyce FU13+57

## Competitors

Competitors: 3

| # | Name | Club | 1 | 2 | 3 | Wins | Pts | Pos |
|---|---|---|---|---|---|---|---|---|
| 1 | Alicja SERWATKA | Judo Team Modliborzyce | | 100 | 0 | 1 | 100 | 2 |
| 2 | Jagoda OLCZYK | Judo Tereszpol | 0 | | 0 | 0 | 0 | 3 |
| 3 | Zofia KOCHAN | HAYATE Judo | 100 | 100 | | 2 | 200 | 1 |

## Matches

| Match | White | | | Blue | Result | Time |
|---|---|---|---|---|---|---|
| 1 | **Alicja SERWATKA** | 1 | 2 | Jagoda OLCZYK | 110-000 | 0:18 |
| 2 | Alicja SERWATKA | 1 | 3 | **Zofia KOCHAN** | 000-100 | 0:25 |
| 3 | Jagoda OLCZYK | 2 | 3 | **Zofia KOCHAN** | 000-100 | 0:35 |

## Results

| Pos | Name |
|---|---|
| 1 | Zofia KOCHAN, HAYATE Judo |
| 2 | Alicja SERWATKA, Judo Team Modliborzyce |
| 3 | Jagoda OLCZYK, Judo Tereszpol |

# Judo Open Tomczak Cup 25.10.2026 Modliborzyce MU13-29

## Competitors

Competitors: 2

| # | Name | Club | 1 | 2 | 1 | 2 | 1 | 2 | Wins | Pts | Pos |
|---|---|---|---|---|---|---|---|---|---|---|---|
| 1 | Yaroslav POLIAK | KZ DUSH n2 Lutsk | | 100 | | 100 | | | 2 | 200 | 1 |
| 2 | Olaf ERBER | SameJudo | 0 | | 0 | | | | 0 | 0 | 2 |

## Matches

| Match | White | | | Blue | Result | Time |
|---|---|---|---|---|---|---|
| 1 | **Yaroslav POLIAK** | 1 | 2 | Olaf ERBER | 100-000 | 0:10 |
| 2 | **Yaroslav POLIAK** | 1 | 2 | Olaf ERBER | 100-000 | 0:42 |
| 3 | Yaroslav POLIAK | 1 | 2 | Olaf ERBER | | |

## Results

| Pos | Name |
|---|---|
| 1 | Yaroslav POLIAK, KZ DUSH n2 Lutsk |
| 2 | Olaf ERBER, SameJudo |

# Judo Open Tomczak Cup 25.10.2026 Modliborzyce MU13-32

## Competitors

Competitors: 2

| # | Name | Club | 1 | 2 | 1 | 2 | 1 | 2 | Wins | Pts | Pos |
|---|---|---|---|---|---|---|---|---|---|---|---|
| 1 | Jakub PIETRUCHA | HAYATE Judo | | 100 | | 100 | | | 2 | 200 | 1 |
| 2 | TOMASZ WILUSZ | UMKS Ostrowia | 0 | | 0 | | | | 0 | 0 | 2 |

## Matches

| Match | White | | | Blue | Result | Time |
|---|---|---|---|---|---|---|
| 1 | **Jakub PIETRUCHA** | 1 | 2 | TOMASZ WILUSZ | 100-000 | 2:53 |
| 2 | **Jakub PIETRUCHA** | 1 | 2 | TOMASZ WILUSZ | 110-000 | 1:40 |
| 3 | Jakub PIETRUCHA | 1 | 2 | TOMASZ WILUSZ | | |

## Results

| Pos | Name |
|---|---|
| 1 | Jakub PIETRUCHA, HAYATE Judo |
| 2 | TOMASZ WILUSZ, UMKS Ostrowia |

# Judo Open Tomczak Cup 25.10.2026 Modliborzyce MU13-35

Competitors: 12

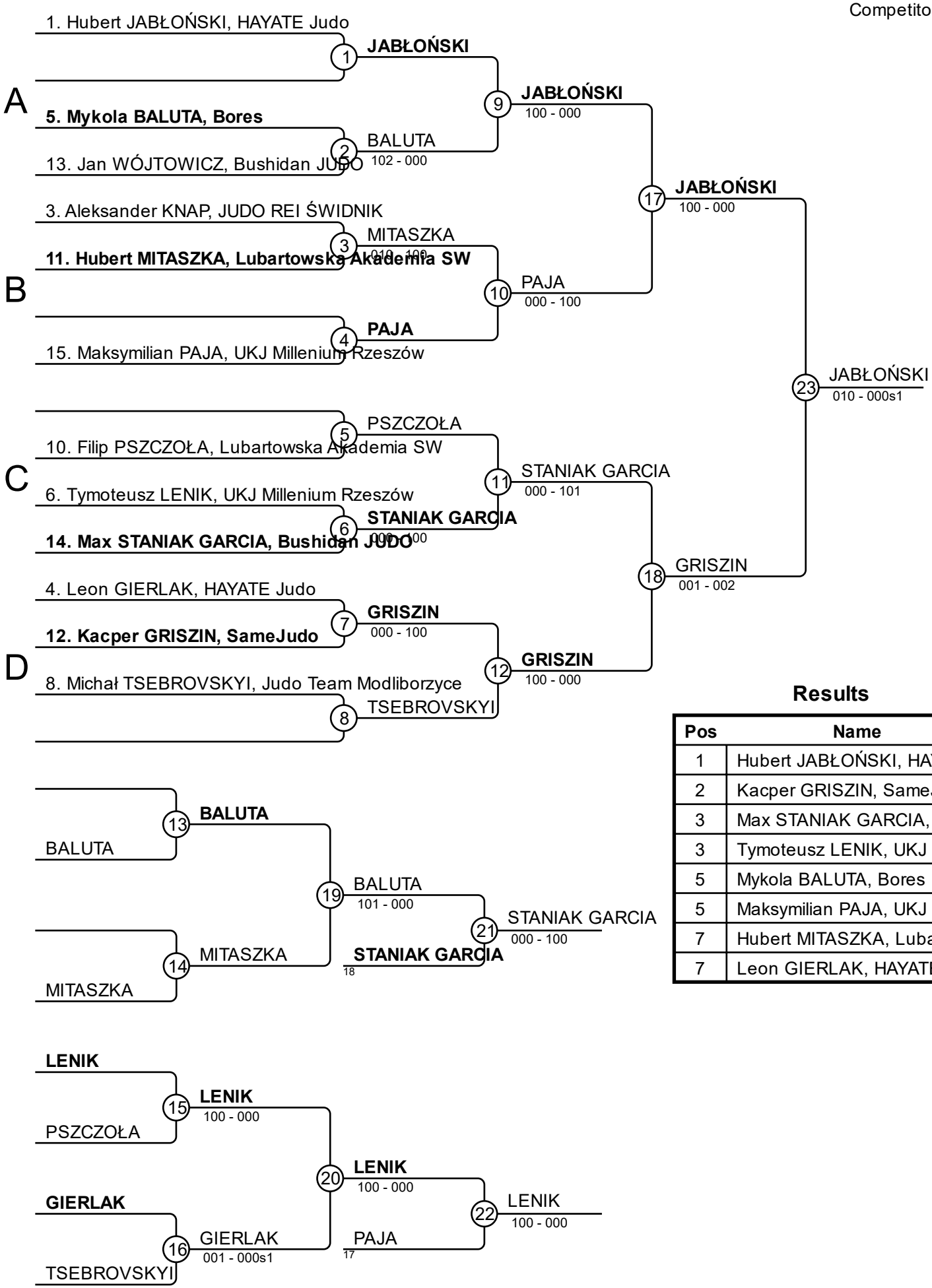


## Results

| Pos | Name |
|---|---|
| 1 | Hubert JABŁOŃSKI, HAYATE Judo |
| 2 | Kacper GRISZIN, SameJudo |
| 3 | Max STANIAK GARCIA, Bushidan JU |
| 3 | Tymoteusz LENIK, UKJ Millenium Rz |
| 5 | Mykola BALUTA, Bores |
| 5 | Maksymilian PAJA, UKJ Millenium Rz |
| 7 | Hubert MITASZKA, Lubartowska Aka |
| 7 | Leon GIERLAK, HAYATE Judo |

# Judo Open Tomczak Cup 25.10.2026 Modliborzyce MU13-38

## Competitors A

Competitors: 8

| # | Name | Club | 1 | 2 | 3 | 4 | Wins | Pts | Pos |
|---|---|---|---|---|---|---|---|---|---|
| 1 | Mikołaj TSEBROVSKYI | Judo Team Modliborzyce | X | | 1 | 100 | 2 | 101 | 2 |
| 2 | Vladyslav DZHAFAROV | Bores | 100 | X | 100 | 100 | 3 | 300 | 1 |
| 3 | Maciej HELMRICH | UKJ Millenium Rzeszów | | | X | 1 | 1 | 1 | 3 |
| 4 | Adam BERNACIAK | SameJudo | | | | X | 0 | 0 | 4 |

## Matches A

| Match | White | | | Blue | Result | Time |
|---|---|---|---|---|---|---|
| 1 | Mikołaj TSEBROVSKYI | 1 | 2 | **Vladyslav DZHAFAROV** | 000-110 | 0:52 |
| 3 | **Maciej HELMRICH** | 3 | 4 | Adam BERNACIAK | 001-000 | 2:00 |
| 5 | **Mikołaj TSEBROVSKYI** | 1 | 3 | Maciej HELMRICH | 001-000 | 2:00 |
| 7 | **Vladyslav DZHAFAROV** | 2 | 4 | Adam BERNACIAK | 100-000 | 0:12 |
| 9 | **Mikołaj TSEBROVSKYI** | 1 | 4 | Adam BERNACIAK | 100-000 | 0:00 |
| 11 | **Vladyslav DZHAFAROV** | 2 | 3 | Maciej HELMRICH | 100-000 | 0:24 |

## Competitors B

| # | Name | Club | 5 | 6 | 7 | 8 | Wins | Pts | Pos |
|---|---|---|---|---|---|---|---|---|---|
| 5 | Wiktor SIŁUSZYK | MULKS T-O Radzyń Podlaski | X | | 100 | 100 | 2 | 200 | 2 |
| 6 | Cezary SROKA | Judo Team Modliborzyce | 100 | X | 100 | 100 | 3 | 300 | 1 |
| 7 | Mieszko RAŁOWSKI | HAYATE Judo | | | X | | 0 | 0 | 4 |
| 8 | Aleksander GĘBALA | Bushidan JUDO | | | 100 | X | 1 | 101 | 3 |

## Matches A

| Match | White | | | Blue | Result | Time |
|---|---|---|---|---|---|---|
| 2 | Wiktor SIŁUSZYK | 5 | 6 | **Cezary SROKA** | 000-100 | 0:07 |
| 4 | Mieszko RAŁOWSKI | 7 | 8 | **Aleksander GĘBALA** | 000-100 | 0:00 |
| 6 | **Wiktor SIŁUSZYK** | 5 | 7 | Mieszko RAŁOWSKI | 100-000 | 0:00 |
| 8 | **Cezary SROKA** | 6 | 8 | Aleksander GĘBALA | 100-000 | 0:07 |
| 10 | **Wiktor SIŁUSZYK** | 5 | 8 | Aleksander GĘBALA | 100-001 | 0:52 |
| 12 | **Cezary SROKA** | 6 | 7 | Mieszko RAŁOWSKI | 100-000 | 0:00 |

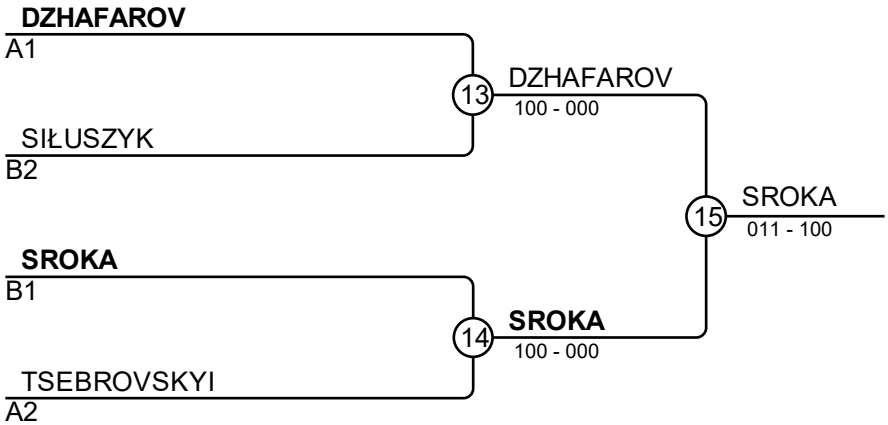


## Results

| Pos | Name |
|---|---|
| 1 | Cezary SROKA, Judo Team Modliborzyce |
| 2 | Vladyslav DZHAFAROV, Bores |
| 3 | Wiktor SIŁUSZYK, MULKS T-O Radzyń Podlaski |
| 3 | Mikołaj TSEBROVSKYI, Judo Team Modliborzyce |

# Judo Open Tomczak Cup 25.10.2026 Modliborzyce MU13-42

Competitors: 13

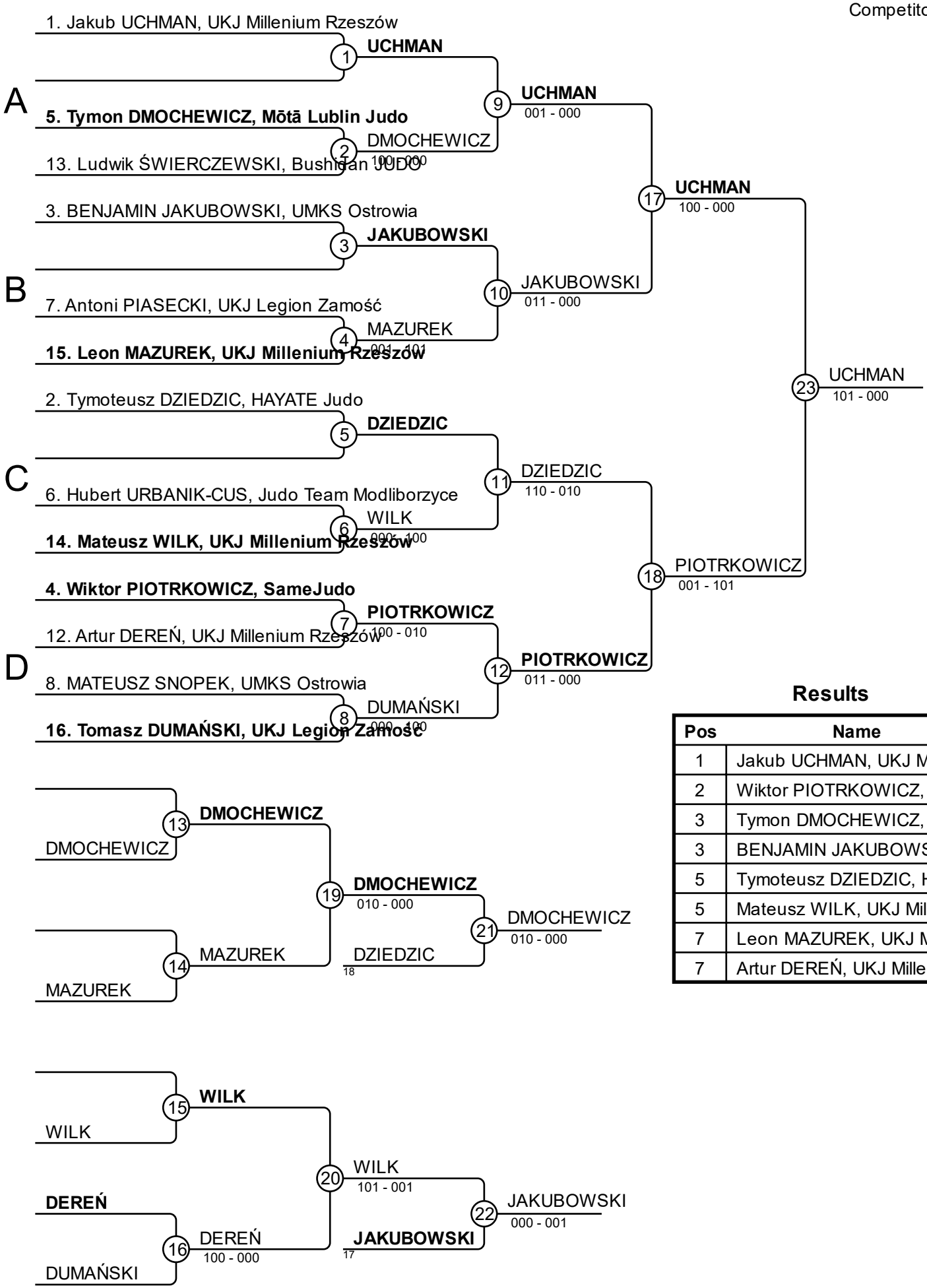


## Results

| Pos | Name |
|---|---|
| 1 | Jakub UCHMAN, UKJ Millenium Rzes |
| 2 | Wiktor PIOTRKOWICZ, SameJudo |
| 3 | Tymon DMOCHEWICZ, Mōtā Lublin |
| 3 | BENJAMIN JAKUBOWSKI, UMKS O |
| 5 | Tymoteusz DZIEDZIC, HAYATE Judo |
| 5 | Mateusz WILK, UKJ Millenium Rzesz |
| 7 | Leon MAZUREK, UKJ Millenium Rze |
| 7 | Artur DEREŃ, UKJ Millenium Rzeszó |

# Judo Open Tomczak Cup 25.10.2026 Modliborzyce MU13-46

Competitors: 12

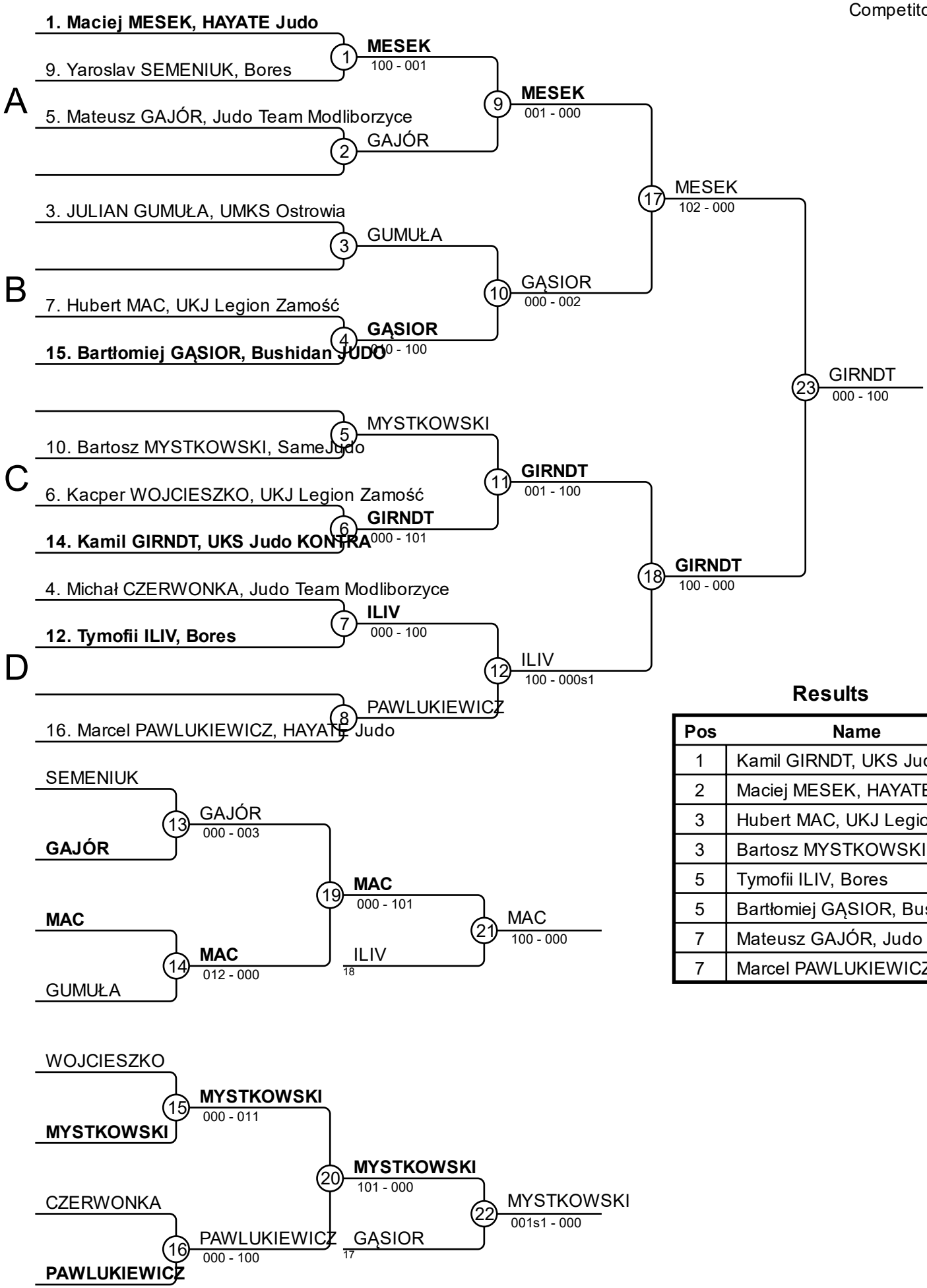


## Results

| Pos | Name |
|---|---|
| 1 | Kamil GIRNDT, UKS Judo KONTRA |
| 2 | Maciej MESEK, HAYATE Judo |
| 3 | Hubert MAC, UKJ Legion Zamość |
| 3 | Bartosz MYSTKOWSKI, SameJudo |
| 5 | Tymofii ILIV, Bores |
| 5 | Bartłomiej GĄSIOR, Bushidan JUDO |
| 7 | Mateusz GAJÓR, Judo Team Modlib |
| 7 | Marcel PAWLUKIEWICZ, HAYATE Ju |

# Judo Open Tomczak Cup 25.10.2026 Modliborzyce MU13-50

## Competitors A

Competitors: 7

| # | Name | Club | 1 | 2 | 3 | 4 | Wins | Pts | Pos |
|---|---|---|---|---|---|---|---|---|---|
| 1 | Oskar NIEDOBYLSKI VEL W. | Judo Team Modliborzyce | X | | | | 0 | 1 | 4 |
| 2 | Kornel MISZTAL | JUDO REI ŚWIDNIK | 100 | X | | | 1 | 100 | 3 |
| 3 | Mark DANYLIUK | KZ DUSH n2 Lutsk | 100 | 1 | X | | 2 | 102 | 2 |
| 4 | Franciszek CYBULA | SameJudo | 100 | 100 | 10 | X | 3 | 210 | 1 |

## Matches A

| Match | White | | | Blue | Result | Time |
|---|---|---|---|---|---|---|
| 1 | Oskar NIEDOBYLSKI VEL W. | 1 | 2 | **Kornel MISZTAL** | 000s3-100 | 1:40 |
| 2 | Mark DANYLIUK | 3 | 4 | **Franciszek CYBULA** | 001s2-010 | 2:00 |
| 4 | Oskar NIEDOBYLSKI VEL W. | 1 | 3 | **Mark DANYLIUK** | 001-100 | 0:55 |
| 5 | Kornel MISZTAL | 2 | 4 | **Franciszek CYBULA** | 000-100s1 | 2:00 |
| 7 | Oskar NIEDOBYLSKI VEL W. | 1 | 4 | **Franciszek CYBULA** | 000-100 | 0:15 |
| 8 | Kornel MISZTAL | 2 | 3 | **Mark DANYLIUK** | 000-001 | 2:00 |

## Competitors B

| # | Name | Club | 5 | 6 | 7 | Wins | Pts | Pos |
|---|---|---|---|---|---|---|---|---|
| 5 | Mikołaj WRÓBEL | Judo Team Modliborzyce | X | | 1 | 1 | 1 | 2 |
| 6 | Stanisław WOŹNIAK | SameJudo | 100 | X | 100 | 2 | 200 | 1 |
| 7 | Nikodem ŁAGÓD | JUDO REI ŚWIDNIK | | | X | 0 | 1 | 3 |

## Matches A

| Match | White | | | Blue | Result | Time |
|---|---|---|---|---|---|---|
| 3 | Mikołaj WRÓBEL | 5 | 6 | **Stanisław WOŹNIAK** | 000-112 | 1:18 |
| 6 | **Mikołaj WRÓBEL** | 5 | 7 | Nikodem ŁAGÓD | 002-001 | 2:24 |
| 9 | **Stanisław WOŹNIAK** | 6 | 7 | Nikodem ŁAGÓD | 100-000 | 0:48 |

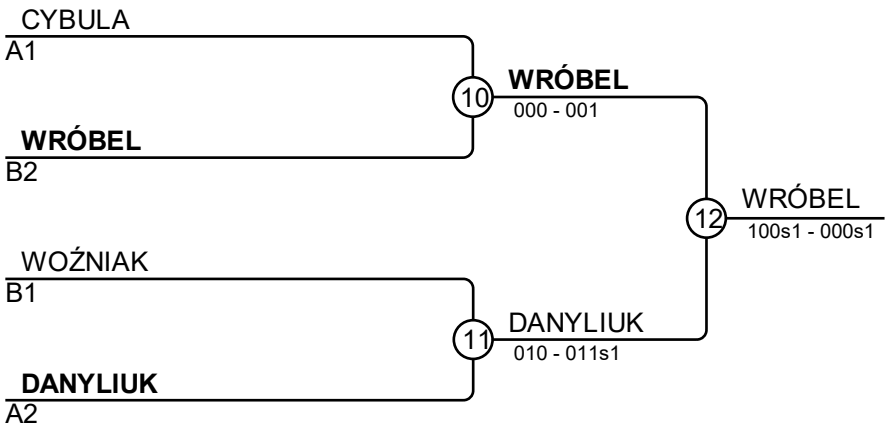


## Results

| Pos | Name |
|---|---|
| 1 | Mikołaj WRÓBEL, Judo Team Modliborzyce |
| 2 | Mark DANYLIUK, KZ DUSH n2 Lutsk |
| 3 | Franciszek CYBULA, SameJudo |
| 3 | Stanisław WOŹNIAK, SameJudo |

# Judo Open Tomczak Cup 25.10.2026 Modliborzyce MU13-55

Competitors: 14

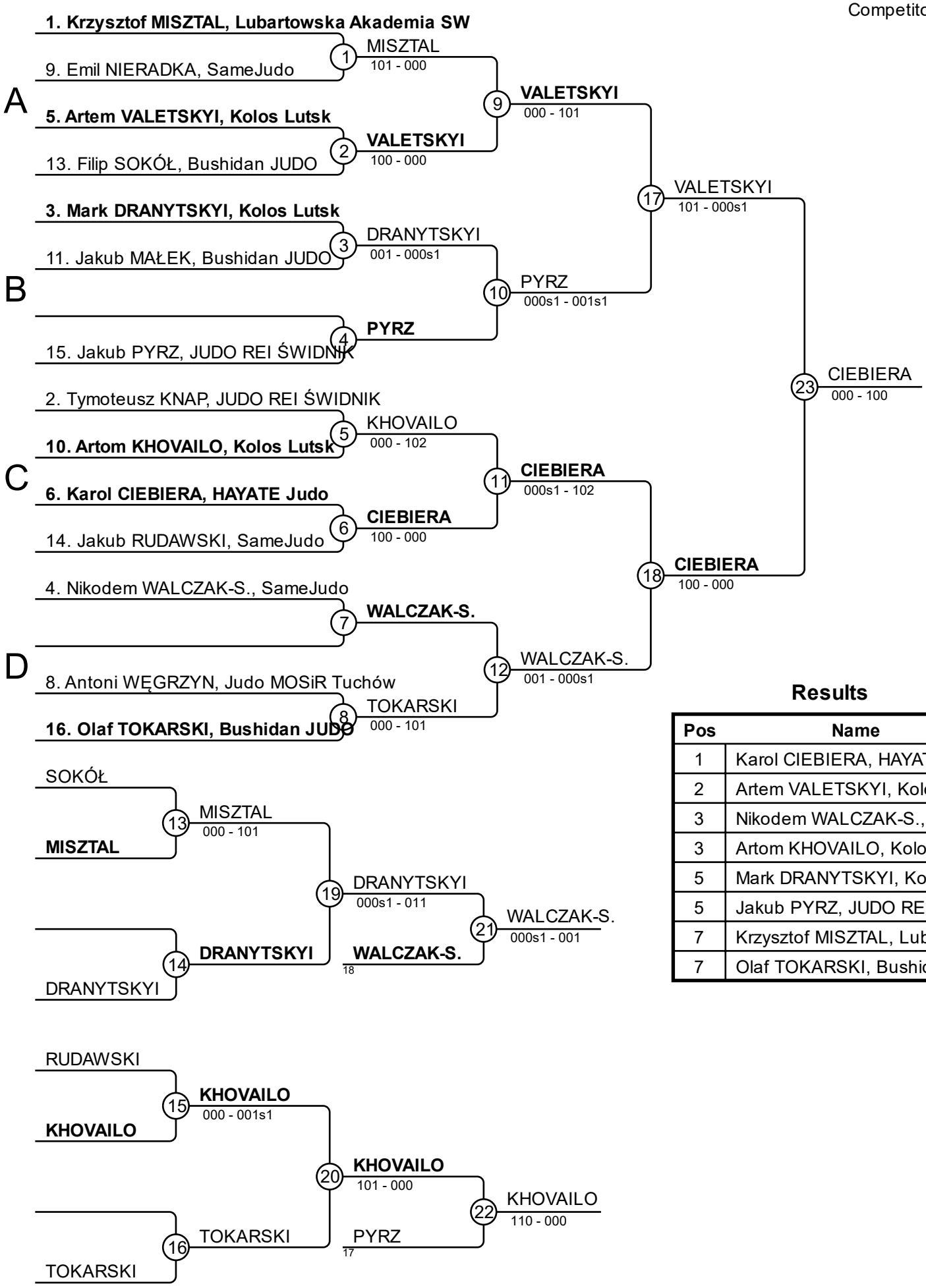


## Results

| Pos | Name |
|---|---|
| 1 | Karol CIEBIERA, HAYATE Judo |
| 2 | Artem VALETSKYI, Kolos Lutsk |
| 3 | Nikodem WALCZAK-S., SameJudo |
| 3 | Artom KHOVAILO, Kolos Lutsk |
| 5 | Mark DRANYTSKYI, Kolos Lutsk |
| 5 | Jakub PYRZ, JUDO REI ŚWIDNIK |
| 7 | Krzysztof MISZTAL, Lubartowska Ak |
| 7 | Olaf TOKARSKI, Bushidan JUDO |

# Judo Open Tomczak Cup 25.10.2026 Modliborzyce MU13-60

## Competitors

Competitors: 4

| # | Name | Club | 1 | 2 | 3 | 4 | Wins | Pts | Pos |
|---|---|---|---|---|---|---|---|---|---|
| 1 | Krzysztof RZĄSA | HAYATE Judo | | 100 | 0 | 0 | 1 | 100 | 3 |
| 2 | Szymon WOLIŃSKI | Akademia Judo PERUN | 0 | | 0 | 0 | 0 | 0 | 4 |
| 3 | Maks DIDKIVSKYI | UKJ Millenium Rzeszów | 100 | 100 | | 0 | 2 | 200 | 2 |
| 4 | Stanisław TKACZYK | Hato Judo | 100 | 100 | 100 | | 3 | 300 | 1 |

## Matches

| Match | White | | | Blue | Result | Time |
|---|---|---|---|---|---|---|
| 1 | **Krzysztof RZĄSA** | 1 | 2 | Szymon WOLIŃSKI | 100-000 | 0:02 |
| 2 | Maks DIDKIVSKYI | 3 | 4 | **Stanisław TKACZYK** | 000-100 | 0:38 |
| 3 | Krzysztof RZĄSA | 1 | 3 | **Maks DIDKIVSKYI** | 000-100 | 0:07 |
| 4 | Szymon WOLIŃSKI | 2 | 4 | **Stanisław TKACZYK** | 000-100 | 0:04 |
| 5 | Krzysztof RZĄSA | 1 | 4 | **Stanisław TKACZYK** | 000-100 | 0:07 |
| 6 | Szymon WOLIŃSKI | 2 | 3 | **Maks DIDKIVSKYI** | 000-100 | 0:09 |

## Results

| Pos | Name |
|---|---|
| 1 | Stanisław TKACZYK, Hato Judo |
| 2 | Maks DIDKIVSKYI, UKJ Millenium Rzeszów |
| 3 | Krzysztof RZĄSA, HAYATE Judo |
| 4 | Szymon WOLIŃSKI, Akademia Judo PERUN |

# Judo Open Tomczak Cup 25.10.2026 Modliborzyce MU13-66

## Competitors

Competitors: 4

| # | Name | Club | 1 | 2 | 3 | 4 | Wins | Pts | Pos |
|---|---|---|---|---|---|---|---|---|---|
| 1 | Nikodem KOLANO | Judo Team Modliborzyce | | 100 | 100 | 100 | 3 | 300 | 1 |
| 2 | Adam STRYCZEK | Judo Team Modliborzyce | 0 | | 0 | 100 | 1 | 100 | 3 |
| 3 | Kostiantyn LOMAKIN | Bores | 0 | 100 | | 100 | 2 | 200 | 2 |
| 4 | Andrzej ZAŃ | SameJudo | 0 | 0 | 0 | | 0 | 0 | 4 |

## Matches

| Match | White | | | Blue | Result | Time |
|---|---|---|---|---|---|---|
| 1 | **Nikodem KOLANO** | 1 | 2 | Adam STRYCZEK | 100-000 | 0:20 |
| 2 | **Kostiantyn LOMAKIN** | 3 | 4 | Andrzej ZAŃ | 100-000 | 0:35 |
| 3 | **Nikodem KOLANO** | 1 | 3 | Kostiantyn LOMAKIN | 110-000 | 0:26 |
| 4 | **Adam STRYCZEK** | 2 | 4 | Andrzej ZAŃ | 100-000 | 0:18 |
| 5 | **Nikodem KOLANO** | 1 | 4 | Andrzej ZAŃ | 100-000 | 0:28 |
| 6 | Adam STRYCZEK | 2 | 3 | **Kostiantyn LOMAKIN** | 000-100 | 0:47 |

## Results

| Pos | Name |
|---|---|
| 1 | Nikodem KOLANO, Judo Team Modliborzyce |
| 2 | Kostiantyn LOMAKIN, Bores |
| 3 | Adam STRYCZEK, Judo Team Modliborzyce |
| 4 | Andrzej ZAŃ, SameJudo |

# Judo Open Tomczak Cup 25.10.2026 Modliborzyce MU13+66

## Competitors

Competitors: 2

| # | Name | Club | 1 | 2 | 1 | 2 | 1 | 2 | Wins | Pts | Pos |
|---|---|---|---|---|---|---|---|---|---|---|---|
| 1 | Krzysztof SĄGOL | SameJudo | | 100 | | 100 | | | 2 | 200 | 1 |
| 2 | Franciszek KRÓLIKOWSKI | UKJ Legion Zamość | 0 | | 0 | | | | 0 | 0 | 2 |

## Matches

| Match | White | | | Blue | Result | Time |
|---|---|---|---|---|---|---|
| 1 | **Krzysztof SĄGOL** | 1 | 2 | Franciszek KRÓLIKOWSKI | 100-000 | 0:32 |
| 2 | **Krzysztof SĄGOL** | 1 | 2 | Franciszek KRÓLIKOWSKI | 100-000 | 0:17 |
| 3 | Krzysztof SĄGOL | 1 | 2 | Franciszek KRÓLIKOWSKI | | |

## Results

| Pos | Name |
|---|---|
| 1 | Krzysztof SĄGOL, SameJudo |
| 2 | Franciszek KRÓLIKOWSKI, UKJ Legion Zamość |

# Judo Open Tomczak Cup 25.10.2026 Modliborzyce FU15-44

## Competitors

Competitors: 3

| # | Name | Club | 1 | 2 | 3 | Wins | Pts | Pos |
|---|---|---|---|---|---|---|---|---|
| 1 | Mariia RYKOVA | Judo Team Modliborzyce | | 0 | 0 | 0 | 0 | 3 |
| 2 | Lena PIETRUCHA | HAYATE Judo | 100 | | 0 | 1 | 100 | 2 |
| 3 | Zuzanna GAWROŃSKA | JUDO REI ŚWIDNIK | 100 | 100 | | 2 | 200 | 1 |

## Matches

| Match | White | | | Blue | Result | Time |
|---|---|---|---|---|---|---|
| 1 | Mariia RYKOVA | 1 | 2 | **Lena PIETRUCHA** | 000-100 | 0:09 |
| 2 | Mariia RYKOVA | 1 | 3 | **Zuzanna GAWROŃSKA** | 000-100 | 0:21 |
| 3 | Lena PIETRUCHA | 2 | 3 | **Zuzanna GAWROŃSKA** | 000s1-100s1 | 2:08 |

## Results

| Pos | Name |
|---|---|
| 1 | Zuzanna GAWROŃSKA, JUDO REI ŚWIDNIK |
| 2 | Lena PIETRUCHA, HAYATE Judo |
| 3 | Mariia RYKOVA, Judo Team Modliborzyce |

# Judo Open Tomczak Cup 25.10.2026 Modliborzyce FU15-52

## Competitors

Competitors: 2

| # | Name | Club | 1 | 2 | 1 | 2 | 1 | 2 | Wins | Pts | Pos |
|---|---|---|---|---|---|---|---|---|---|---|---|
| 1 | Zuzanna DĄBROWSKA | MULKS T-O Radzyń Podlaski | 0 | | 0 | | | | 0 | 0 | 2 |
| 2 | Zuzanna LEŚ | UKS Jasiołeczka | 100 | | 100 | | | | 2 | 200 | 1 |

## Matches

| Match | White | | | Blue | Result | Time |
|---|---|---|---|---|---|---|
| 1 | Zuzanna DĄBROWSKA | 1 | 2 | **Zuzanna LEŚ** | 000-100 | 0:04 |
| 2 | Zuzanna DĄBROWSKA | 1 | 2 | **Zuzanna LEŚ** | 000-100 | 0:18 |
| 3 | Zuzanna DĄBROWSKA | 1 | 2 | Zuzanna LEŚ | | |

## Results

| Pos | Name |
|---|---|
| 1 | Zuzanna LEŚ, UKS Jasiołeczka |
| 2 | Zuzanna DĄBROWSKA, MULKS T-O Radzyń Podlaski |

# Judo Open Tomczak Cup 25.10.2026 Modliborzyce FU15-57

## Competitors

Competitors: 3

| # | Name | Club | 1 | 2 | 3 | Wins | Pts | Pos |
|---|---|---|---|---|---|---|---|---|
| 1 | Maja PIENIĄŻEK | HAYATE Judo | | 100 | 0 | 1 | 100 | 2 |
| 2 | Weronika SOKÓŁ | Judo Team Modliborzyce | 0 | | 0 | 0 | 0 | 3 |
| 3 | Laura FLORCZAK | SameJudo | 100 | 100 | | 2 | 200 | 1 |

## Matches

| Match | White | | | Blue | Result | Time |
|---|---|---|---|---|---|---|
| 1 | **Maja PIENIĄŻEK** | 1 | 2 | Weronika SOKÓŁ | 100-000 | 0:09 |
| 2 | Maja PIENIĄŻEK | 1 | 3 | **Laura FLORCZAK** | 000-101 | 0:41 |
| 3 | Weronika SOKÓŁ | 2 | 3 | **Laura FLORCZAK** | 000-110 | 0:26 |

## Results

| Pos | Name |
|---|---|
| 1 | Laura FLORCZAK, SameJudo |
| 2 | Maja PIENIĄŻEK, HAYATE Judo |
| 3 | Weronika SOKÓŁ, Judo Team Modliborzyce |

# Judo Open Tomczak Cup 25.10.2026 Modliborzyce FU15-63

## Competitors

Competitors: 1

| # | Name | Club | 1 | Wins | Pts | Pos |
|---|---|---|---|---|---|---|
| 1 | Milena PIENIOWSKA | HAYATE Judo | | 0 | 0 | 1 |

## Matches

| Match | White | Blue | Result | Time |
|---|---|---|---|---|

## Results

| Pos | Name |
|---|---|
| 1 | Milena PIENIOWSKA, HAYATE Judo |

# Judo Open Tomczak Cup 25.10.2026 Modliborzyce FU15-70

## Competitors

Competitors: 1

| # | Name | Club | 1 | Wins | Pts | Pos |
|---|---|---|---|---|---|---|
| 1 | Julia ZARZECZNA | Judo Team Modliborzyce | | 0 | 0 | 1 |

## Matches

| Match | White | Blue | Result | Time |
|---|---|---|---|---|

## Results

| Pos | Name |
|---|---|
| 1 | Julia ZARZECZNA, Judo Team Modliborzyce |

# Judo Open Tomczak Cup 25.10.2026 Modliborzyce MU15-42

## Competitors A

Competitors: 7

| # | Name | Club | 1 | 2 | 3 | 4 | Wins | Pts | Pos |
|---|---|---|---|---|---|---|---|---|---|
| 1 | Wolodimir KARABAN | UKJ Millenium Rzeszów | X | 100 | 10 | 1 | 3 | 111 | 1 |
| 2 | Łukasz ZAKIEWICZ | Bushidan JUDO | | X | | | 0 | 0 | 4 |
| 3 | Adam KOWALCZYK | UKS Spartakus Lublin | | 100 | X | | 1 | 100 | 3 |
| 4 | Jakub SMOLIŃSKI | HAYATE Judo | | 100 | 100 | X | 2 | 200 | 2 |

## Matches A

| Match | White | | | Blue | Result | Time |
|---|---|---|---|---|---|---|
| 1 | **Wolodimir KARABAN** | 1 | 2 | Łukasz ZAKIEWICZ | 100-000 | 0:15 |
| 2 | Adam KOWALCZYK | 3 | 4 | **Jakub SMOLIŃSKI** | 000-101 | 1:30 |
| 4 | **Wolodimir KARABAN** | 1 | 3 | Adam KOWALCZYK | 011-000 | 3:00 |
| 5 | Łukasz ZAKIEWICZ | 2 | 4 | **Jakub SMOLIŃSKI** | 000-101 | 1:29 |
| 7 | **Wolodimir KARABAN** | 1 | 4 | Jakub SMOLIŃSKI | 001-000 | 3:00 |
| 8 | Łukasz ZAKIEWICZ | 2 | 3 | **Adam KOWALCZYK** | 000-100 | 0:00 |

## Competitors B

| # | Name | Club | 5 | 6 | 7 | Wins | Pts | Pos |
|---|---|---|---|---|---|---|---|---|
| 5 | Mieszko NIEDZIAŁEK | UKS Spartakus Lublin | X | | 100 | 1 | 100 | 2 |
| 6 | Jakub KALISZCZAK | UKJ Legion Zamość | 1 | X | 100 | 2 | 101 | 1 |
| 7 | Xavier SIWIELA | Bushidan JUDO | | | X | 0 | 0 | 3 |

## Matches A

| Match | White | | | Blue | Result | Time |
|---|---|---|---|---|---|---|
| 3 | Mieszko NIEDZIAŁEK | 5 | 6 | **Jakub KALISZCZAK** | 000-001 | 3:00 |
| 6 | **Mieszko NIEDZIAŁEK** | 5 | 7 | Xavier SIWIELA | 100-000 | 1:23 |
| 9 | **Jakub KALISZCZAK** | 6 | 7 | Xavier SIWIELA | 100-000 | 0:44 |

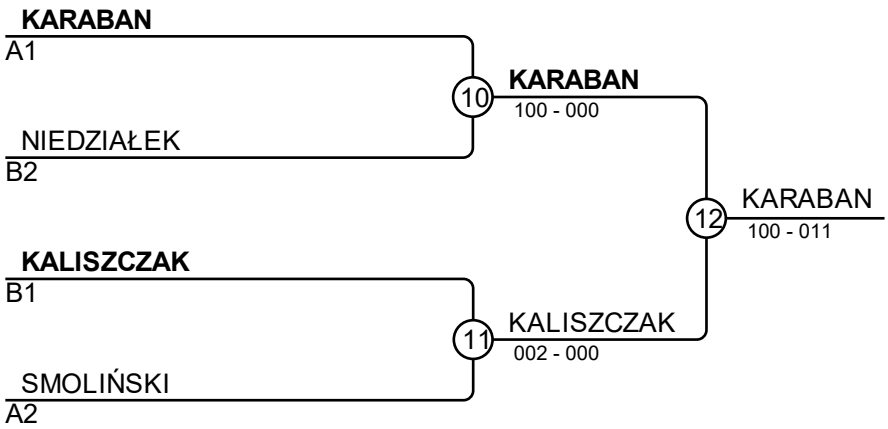


## Results

| Pos | Name |
|---|---|
| 1 | Wolodimir KARABAN, UKJ Millenium Rzeszów |
| 2 | Jakub KALISZCZAK, UKJ Legion Zamość |
| 3 | Mieszko NIEDZIAŁEK, UKS Spartakus Lublin |
| 3 | Jakub SMOLIŃSKI, HAYATE Judo |

# Judo Open Tomczak Cup 25.10.2026 Modliborzyce MU15-46

## Competitors

Competitors: 3

| # | Name | Club | 1 | 2 | 3 | Wins | Pts | Pos |
|---|---|---|---|---|---|---|---|---|
| 1 | Aleksander WIĘCH | UKJ Millenium Rzeszów | | 100 | 100 | 2 | 200 | 1 |
| 2 | Miłosz KOZAK | UKJ Legion Zamość | 0 | | 100 | 1 | 100 | 2 |
| 3 | Kamil ZABOROWSKI | HAYATE Judo | 0 | 0 | | 0 | 0 | 3 |

## Matches

| Match | White | | | Blue | Result | Time |
|---|---|---|---|---|---|---|
| 1 | **Aleksander WIĘCH** | 1 | 2 | Miłosz KOZAK | 100-000s1 | 1:59 |
| 2 | **Aleksander WIĘCH** | 1 | 3 | Kamil ZABOROWSKI | 100-000 | 0:14 |
| 3 | **Miłosz KOZAK** | 2 | 3 | Kamil ZABOROWSKI | 100-000 | 1:06 |

## Results

| Pos | Name |
|---|---|
| 1 | Aleksander WIĘCH, UKJ Millenium Rzeszów |
| 2 | Miłosz KOZAK, UKJ Legion Zamość |
| 3 | Kamil ZABOROWSKI, HAYATE Judo |

# Judo Open Tomczak Cup 25.10.2026 Modliborzyce MU15-50

## Competitors A

Competitors: 6

| # | Name | Club | 1 | 2 | 3 | Wins | Pts | Pos |
|---|---|---|---|---|---|---|---|---|
| 1 | Michał KOZAK | UKS Spartakus Lublin | X | 100 | | 1 | 100 | 2 |
| 2 | Maciej GÓRSKI | Bushidan JUDO | | X | | 0 | 0 | 3 |
| 3 | Kordian BORKOWSKI | UKJ Legion Zamość | 10 | 100 | X | 2 | 110 | 1 |

## Matches A

| Match | White | | | Blue | Result | Time |
|---|---|---|---|---|---|---|
| 1 | **Michał KOZAK** | 1 | 2 | Maciej GÓRSKI | 103-000 | 2:50 |
| 3 | Michał KOZAK | 1 | 3 | **Kordian BORKOWSKI** | 000-010 | 3:00 |
| 5 | Maciej GÓRSKI | 2 | 3 | **Kordian BORKOWSKI** | 000-100 | 0:23 |

## Competitors B

| # | Name | Club | 4 | 5 | 6 | Wins | Pts | Pos |
|---|---|---|---|---|---|---|---|---|
| 4 | Leon DUSZA | UKJ Millenium Rzeszów | X | 10 | | 1 | 10 | 2 |
| 5 | Konrad WACŁAWEK | JUDO REI ŚWIDNIK | | X | | 0 | 0 | 3 |
| 6 | Adam ŁĄTKA | Judo MOSiR Tuchów | 100 | 100 | X | 2 | 200 | 1 |

## Matches A

| Match | White | | | Blue | Result | Time |
|---|---|---|---|---|---|---|
| 2 | **Leon DUSZA** | 4 | 5 | Konrad WACŁAWEK | 010s1-000 | 1:06 |
| 4 | Leon DUSZA | 4 | 6 | **Adam ŁĄTKA** | 000-101 | 1:41 |
| 6 | Konrad WACŁAWEK | 5 | 6 | **Adam ŁĄTKA** | 000-100 | 0:34 |

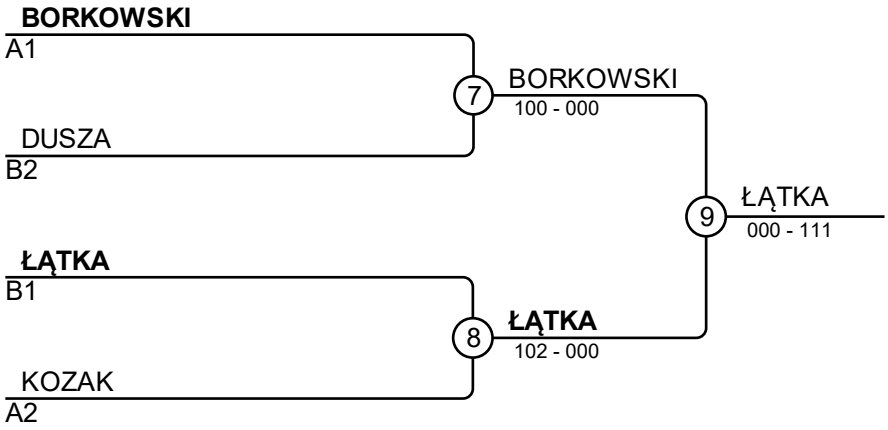


## Results

| Pos | Name |
|---|---|
| 1 | Adam ŁĄTKA, Judo MOSiR Tuchów |
| 2 | Kordian BORKOWSKI, UKJ Legion Zamość |
| 3 | Leon DUSZA, UKJ Millenium Rzeszów |
| 3 | Michał KOZAK, UKS Spartakus Lublin |

# Judo Open Tomczak Cup 25.10.2026 Modliborzyce MU15-55

## Competitors

Competitors: 4

| # | Name | Club | 1 | 2 | 3 | 4 | Wins | Pts | Pos |
|---|---|---|---|---|---|---|---|---|---|
| 1 | Ilia KRYVYI | UKS Spartakus Lublin | | 100 | 100 | 100 | 3 | 300 | 1 |
| 2 | Roch ZAJIC | UKJ Millenium Rzeszów | 0 | | 0 | 0 | 0 | 0 | 4 |
| 3 | Illia ARDEL | Bores | 0 | 100 | | 10 | 2 | 110 | 2 |
| 4 | Karol MACIEJEWSKI | Skorpion judo Krosno | 0 | 100 | 0 | | 1 | 101 | 3 |

## Matches

| Match | White | | | Blue | Result | Time |
|---|---|---|---|---|---|---|
| 1 | **Ilia KRYVYI** | 1 | 2 | Roch ZAJIC | 101-000 | 1:19 |
| 2 | **Illia ARDEL** | 3 | 4 | Karol MACIEJEWSKI | 010-001 | 3:00 |
| 3 | **Ilia KRYVYI** | 1 | 3 | Illia ARDEL | 101-000 | 2:48 |
| 4 | Roch ZAJIC | 2 | 4 | **Karol MACIEJEWSKI** | 000-101s1 | 1:54 |
| 5 | **Ilia KRYVYI** | 1 | 4 | Karol MACIEJEWSKI | 110s1-000s1 | 2:14 |
| 6 | Roch ZAJIC | 2 | 3 | **Illia ARDEL** | 000-101 | 1:44 |

## Results

| Pos | Name |
|---|---|
| 1 | Ilia KRYVYI, UKS Spartakus Lublin |
| 2 | Illia ARDEL, Bores |
| 3 | Karol MACIEJEWSKI, Skorpion judo Krosno |
| 4 | Roch ZAJIC, UKJ Millenium Rzeszów |

# Judo Open Tomczak Cup 25.10.2026 Modliborzyce MU15-60

Competitors: 9

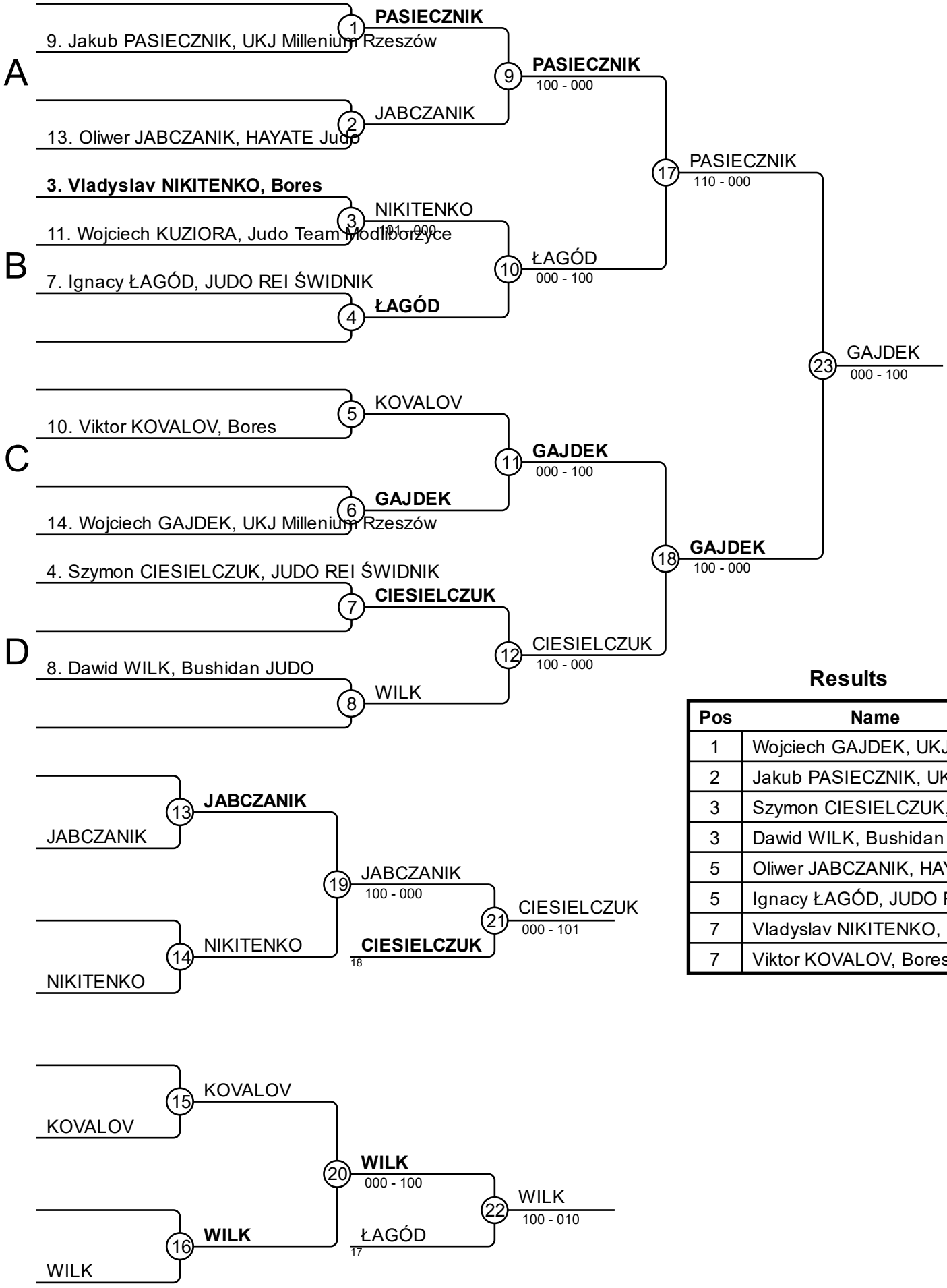


## Results

| Pos | Name |
|---|---|
| 1 | Wojciech GAJDEK, UKJ Millenium Rz |
| 2 | Jakub PASIECZNIK, UKJ Millenium F |
| 3 | Szymon CIESIELCZUK, JUDO REI Ś |
| 3 | Dawid WILK, Bushidan JUDO |
| 5 | Oliwer JABCZANIK, HAYATE Judo |
| 5 | Ignacy ŁAGÓD, JUDO REI ŚWIDNIK |
| 7 | Vladyslav NIKITENKO, Bores |
| 7 | Viktor KOVALOV, Bores |

# Judo Open Tomczak Cup 25.10.2026 Modliborzyce MU15-66

## Competitors A

Competitors: 6

| # | Name | Club | 1 | 2 | 3 | Wins | Pts | Pos |
|---|---|---|---|---|---|---|---|---|
| 1 | Maciej ZACIOS | HAYATE Judo | X | | 100 | 1 | 100 | 2 |
| 2 | Filip WRÓBEL | Judo Team Modliborzyce | 100 | X | 100 | 2 | 200 | 1 |
| 3 | Mykyta SHEVCHUK | Bores | | | X | 0 | 0 | 3 |

## Matches A

| Match | White | | | Blue | Result | Time |
|---|---|---|---|---|---|---|
| 1 | Maciej ZACIOS | 1 | 2 | **Filip WRÓBEL** | 000-100 | 1:44 |
| 3 | **Maciej ZACIOS** | 1 | 3 | Mykyta SHEVCHUK | 100-000 | 0:20 |
| 5 | **Filip WRÓBEL** | 2 | 3 | Mykyta SHEVCHUK | 110-000 | 0:09 |

## Competitors B

| # | Name | Club | 4 | 5 | 6 | Wins | Pts | Pos |
|---|---|---|---|---|---|---|---|---|
| 4 | Bartosz BOROWIEC | HAYATE Judo | X | 10 | 100 | 2 | 110 | 1 |
| 5 | Alan FELEK | Akademia Judo PERUN | | X | | 0 | 1 | 3 |
| 6 | Artem PARKHOMEI | Bores | | 100 | X | 1 | 110 | 2 |

## Matches A

| Match | White | | | Blue | Result | Time |
|---|---|---|---|---|---|---|
| 2 | **Bartosz BOROWIEC** | 4 | 5 | Alan FELEK | 011-001 | 1:31 |
| 4 | **Bartosz BOROWIEC** | 4 | 6 | Artem PARKHOMEI | 100-010 | 1:59 |
| 6 | Alan FELEK | 5 | 6 | **Artem PARKHOMEI** | 000-100 | 0:28 |

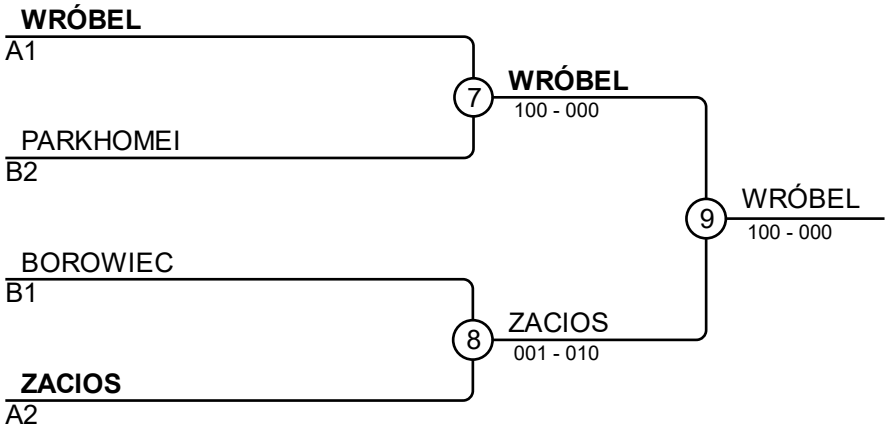


## Results

| Pos | Name |
|---|---|
| 1 | Filip WRÓBEL, Judo Team Modliborzyce |
| 2 | Maciej ZACIOS, HAYATE Judo |
| 3 | Artem PARKHOMEI, Bores |
| 3 | Bartosz BOROWIEC, HAYATE Judo |

# Judo Open Tomczak Cup 25.10.2026 Modliborzyce MU15-73

## Competitors

Competitors: 5

| # | Name | Club | 1 | 2 | 3 | 4 | 5 | Wins | Pts | Pos |
|---|---|---|---|---|---|---|---|---|---|---|
| 1 | Mikołaj SOPRONIUK | SameJudo | | 10 | 0 | 0 | 0 | 1 | 10 | 4 |
| 2 | Mateusz ZACIOS | HAYATE Judo | 0 | | 0 | 0 | 0 | 0 | 0 | 5 |
| 3 | Platon MARCHUK | Bores | 100 | 1 | | 0 | 100 | 3 | 211 | 2 |
| 4 | Jakub CAŁKA | UKJ Legion Zamość | 100 | 100 | 100 | | 100 | 4 | 400 | 1 |
| 5 | Jakub FRĄCZYK | Akademia Judo PERUN | 100 | 100 | 0 | 0 | | 2 | 200 | 3 |

## Matches

| Match | White | | | Blue | Result | Time |
|---|---|---|---|---|---|---|
| 1 | **Jakub CAŁKA** | 4 | 5 | Jakub FRĄCZYK | 100-000 | 0:17 |
| 2 | **Mikołaj SOPRONIUK** | 1 | 2 | Mateusz ZACIOS | 010-000 | 3:00 |
| 3 | Platon MARCHUK | 3 | 4 | **Jakub CAŁKA** | 010-101 | 0:58 |
| 4 | Mikołaj SOPRONIUK | 1 | 5 | **Jakub FRĄCZYK** | 000-100 | 0:07 |
| 5 | Mateusz ZACIOS | 2 | 3 | **Platon MARCHUK** | 000s2-002 | 3:00 |
| 6 | Mikołaj SOPRONIUK | 1 | 4 | **Jakub CAŁKA** | 000-100 | 0:29 |
| 7 | **Platon MARCHUK** | 3 | 5 | Jakub FRĄCZYK | 100-000 | 0:50 |
| 8 | Mateusz ZACIOS | 2 | 4 | **Jakub CAŁKA** | 000-100 | 1:36 |
| 9 | Mikołaj SOPRONIUK | 1 | 3 | **Platon MARCHUK** | 000-100 | 0:27 |
| 10 | Mateusz ZACIOS | 2 | 5 | **Jakub FRĄCZYK** | 000-100 | 0:36 |

## Results

| Pos | Name |
|---|---|
| 1 | Jakub CAŁKA, UKJ Legion Zamość |
| 2 | Platon MARCHUK, Bores |
| 3 | Jakub FRĄCZYK, Akademia Judo PERUN |
| 4 | Mikołaj SOPRONIUK, SameJudo |
| 5 | Mateusz ZACIOS, HAYATE Judo |

# Judo Open Tomczak Cup 25.10.2026 Modliborzyce MU15-81

## Competitors

Competitors: 2

| # | Name | Club | 1 | 2 | 1 | 2 | 1 | 2 | Wins | Pts | Pos |
|---|---|---|---|---|---|---|---|---|---|---|---|
| 1 | Maksym OBACH | KZ DUSH n2 Lutsk | | 0 | | 0 | | | 0 | 0 | 2 |
| 2 | Paweł BATOR | HAYATE Judo | 100 | | 100 | | | | 2 | 200 | 1 |

## Matches

| Match | White | | | Blue | Result | Time |
|---|---|---|---|---|---|---|
| 1 | Maksym OBACH | 1 | 2 | **Paweł BATOR** | 000-100 | 0:27 |
| 2 | Maksym OBACH | 1 | 2 | **Paweł BATOR** | 000-100 | 0:09 |
| 3 | Maksym OBACH | 1 | 2 | Paweł BATOR | | |

## Results

| Pos | Name |
|---|---|
| 1 | Paweł BATOR, HAYATE Judo |
| 2 | Maksym OBACH, KZ DUSH n2 Lutsk |

# Judo Open Tomczak Cup 25.10.2026 Modliborzyce MU15-90

## Competitors

Competitors: 1

| # | Name | Club | 1 | Wins | Pts | Pos |
|---|---|---|---|---|---|---|
| 1 | Danylo YAKUNIN | JUDO REI ŚWIDNIK | | 0 | 0 | 1 |

## Matches

| Match | White | Blue | Result | Time |
|---|---|---|---|---|

## Results

| Pos | Name |
|---|---|
| 1 | Danylo YAKUNIN, JUDO REI ŚWIDNIK |

# Judo Open Tomczak Cup 25.10.2026 Modliborzyce FU18-44

## Competitors

Competitors: 2

| # | Name | Club | 1 | 2 | 1 | 2 | 1 | 2 | Wins | Pts | Pos |
|---|---|---|---|---|---|---|---|---|---|---|---|
| 1 | Hanna DĄBROWSKA | MULKS T-O Radzyń Podlaski | 100 | | 100 | | | | 2 | 200 | 1 |
| 2 | Maria ZAJKO | MULKS T-O Radzyń Podlaski | 0 | | 0 | | | | 0 | 0 | 2 |

## Matches

| Match | White | | | Blue | Result | Time |
|---|---|---|---|---|---|---|
| 1 | **Hanna DĄBROWSKA** | 1 | 2 | Maria ZAJKO | 100s1-000s2 | 2:37 |
| 2 | **Hanna DĄBROWSKA** | 1 | 2 | Maria ZAJKO | 100-000 | 0:22 |
| 3 | Hanna DĄBROWSKA | 1 | 2 | Maria ZAJKO | | |

## Results

| Pos | Name |
|---|---|
| 1 | Hanna DĄBROWSKA, MULKS T-O Radzyń Podlaski |
| 2 | Maria ZAJKO, MULKS T-O Radzyń Podlaski |

# Judo Open Tomczak Cup 25.10.2026 Modliborzyce FU18-48

## Competitors

Competitors: 3

| # | Name | Club | 1 | 2 | 3 | Wins | Pts | Pos |
|---|---|---|---|---|---|---|---|---|
| 1 | Nadia OBRYCKA | Bushidan JUDO | | 0 | 0 | 0 | 0 | 3 |
| 2 | Sandra WACHNIK | Bushidan JUDO | 100 | | 0 | 1 | 110 | 2 |
| 3 | Noemi PLUTA | HAYATE Judo | 10 | 100 | | 2 | 110 | 1 |

## Matches

| Match | White | | | Blue | Result | Time |
|---|---|---|---|---|---|---|
| 1 | Nadia OBRYCKA | 1 | 2 | **Sandra WACHNIK** | 000-100 | 0:39 |
| 2 | Nadia OBRYCKA | 1 | 3 | **Noemi PLUTA** | 000s2-012 | 4:00 |
| 3 | Sandra WACHNIK | 2 | 3 | **Noemi PLUTA** | 010s1-100 | 4:00 |

## Results

| Pos | Name |
|---|---|
| 1 | Noemi PLUTA, HAYATE Judo |
| 2 | Sandra WACHNIK, Bushidan JUDO |
| 3 | Nadia OBRYCKA, Bushidan JUDO |

# Judo Open Tomczak Cup 25.10.2026 Modliborzyce FU18-63

## Competitors

Competitors: 5

| # | Name | Club | 1 | 2 | 3 | 4 | 5 | Wins | Pts | Pos |
|---|---|---|---|---|---|---|---|---|---|---|
| 1 | Adrianna MANAILO | Bushidan JUDO | | 100 | 0 | 0 | 0 | 1 | 101 | 4 |
| 2 | Alicja BANACH | MULKS T-O Radzyń Podlaski | 0 | | 0 | 0 | 0 | 0 | 1 | 5 |
| 3 | Paulina PROĆ | UKJ Legion Zamość | 100 | 100 | | 0 | 0 | 2 | 200 | 3 |
| 4 | Julia BARAN | HAYATE Judo | 100 | 100 | 100 | | 100 | 4 | 400 | 1 |
| 5 | Wiktoria BATOR | HAYATE Judo | 100 | 100 | 1 | 0 | | 3 | 201 | 2 |

## Matches

| Match | White | | | Blue | Result | Time |
|---|---|---|---|---|---|---|
| 1 | **Julia BARAN** | 4 | 5 | Wiktoria BATOR | 100-000 | 0:28 |
| 2 | **Adrianna MANAILO** | 1 | 2 | Alicja BANACH | 110-000 | 0:28 |
| 3 | Paulina PROĆ | 3 | 4 | **Julia BARAN** | 000-101 | 0:48 |
| 4 | Adrianna MANAILO | 1 | 5 | **Wiktoria BATOR** | 001-100 | 1:14 |
| 5 | Alicja BANACH | 2 | 3 | **Paulina PROĆ** | 000-103 | 1:39 |
| 6 | Adrianna MANAILO | 1 | 4 | **Julia BARAN** | 000-100 | 1:51 |
| 7 | Paulina PROĆ | 3 | 5 | **Wiktoria BATOR** | 000s1-001s1 | 4:16 |
| 8 | Alicja BANACH | 2 | 4 | **Julia BARAN** | 000-100 | 0:28 |
| 9 | Adrianna MANAILO | 1 | 3 | **Paulina PROĆ** | 000s1-110s1 | 3:35 |
| 10 | Alicja BANACH | 2 | 5 | **Wiktoria BATOR** | 001-100 | 0:55 |

## Results

| Pos | Name |
|---|---|
| 1 | Julia BARAN, HAYATE Judo |
| 2 | Wiktoria BATOR, HAYATE Judo |
| 3 | Paulina PROĆ, UKJ Legion Zamość |
| 4 | Adrianna MANAILO, Bushidan JUDO |
| 5 | Alicja BANACH, MULKS T-O Radzyń Podlaski |

# Judo Open Tomczak Cup 25.10.2026 Modliborzyce FU18-70

## Competitors

Competitors: 1

| # | Name | Club | 1 | Wins | Pts | Pos |
|---|---|---|---|---|---|---|
| 1 | Julia ZARZECZNA | Judo Team Modliborzyce | | 0 | 0 | 1 |

## Matches

| Match | White | Blue | Result | Time |
|---|---|---|---|---|

## Results

| Pos | Name |
|---|---|
| 1 | Julia ZARZECZNA, Judo Team Modliborzyce |

# Judo Open Tomczak Cup 25.10.2026 Modliborzyce MU18-46

## Competitors

Competitors: 4

| # | Name | Club | 1 | 2 | 3 | 4 | Wins | Pts | Pos |
|---|---|---|---|---|---|---|---|---|---|
| 1 | Jakub KALISZCZAK | UKJ Legion Zamość | | 0 | 100 | 0 | 1 | 100 | 3 |
| 2 | Miłosz KOZAK | UKJ Legion Zamość | 100 | | 100 | 1 | 3 | 201 | 1 |
| 3 | Xavier SIWIELA | Bushidan JUDO | 0 | 0 | | 0 | 0 | 0 | 4 |
| 4 | Mieszko NIEDZIAŁEK | UKS Spartakus Lublin | 100 | 0 | 100 | | 2 | 200 | 2 |

## Matches

| Match | White | | | Blue | Result | Time |
|---|---|---|---|---|---|---|
| 1 | Jakub KALISZCZAK | 1 | 2 | **Miłosz KOZAK** | 000-100 | 1:08 |
| 2 | Xavier SIWIELA | 3 | 4 | **Mieszko NIEDZIAŁEK** | 000-100 | 0:11 |
| 3 | **Jakub KALISZCZAK** | 1 | 3 | Xavier SIWIELA | 100-000 | 0:40 |
| 4 | **Miłosz KOZAK** | 2 | 4 | Mieszko NIEDZIAŁEK | 002s1-000 | 4:00 |
| 5 | Jakub KALISZCZAK | 1 | 4 | **Mieszko NIEDZIAŁEK** | 000-101 | 3:10 |
| 6 | **Miłosz KOZAK** | 2 | 3 | Xavier SIWIELA | 100-000 | 1:01 |

## Results

| Pos | Name |
|---|---|
| 1 | Miłosz KOZAK, UKJ Legion Zamość |
| 2 | Mieszko NIEDZIAŁEK, UKS Spartakus Lublin |
| 3 | Jakub KALISZCZAK, UKJ Legion Zamość |
| 4 | Xavier SIWIELA, Bushidan JUDO |

# Judo Open Tomczak Cup 25.10.2026 Modliborzyce MU18-55

## Competitors

Competitors: 4

| # | Name | Club | 1 | 2 | 3 | 4 | Wins | Pts | Pos |
|---|---|---|---|---|---|---|---|---|---|
| 1 | Kordian BORKOWSKI | UKJ Legion Zamość | | 0 | 0 | | 0 | 0 | 3 |
| 2 | Bartłomiej KALISZCZAK | UKJ Legion Zamość | 100 | | 100 | | 2 | 200 | 1 |
| 3 | Ksawery KRUCZEK | UKJ Millenium Rzeszów | 100 | 0 | | | 1 | 100 | 2 |
| 4 | ~~Ilia KRYVYI~~ | UKS Spartakus Lublin | | | | | 0 | 0 | 4 |

## Matches

| Match | White | | | Blue | Result | Time |
|---|---|---|---|---|---|---|
| 1 | Kordian BORKOWSKI | 1 | 2 | **Bartłomiej KALISZCZAK** | 000-101 | 0:46 |
| 2 | Ksawery KRUCZEK | 3 | 4 | Ilia KRYVYI | | |
| 3 | Kordian BORKOWSKI | 1 | 3 | **Ksawery KRUCZEK** | 000-100 | 0:00 |
| 4 | Bartłomiej KALISZCZAK | 2 | 4 | Ilia KRYVYI | | |
| 5 | Kordian BORKOWSKI | 1 | 4 | Ilia KRYVYI | | |
| 6 | **Bartłomiej KALISZCZAK** | 2 | 3 | Ksawery KRUCZEK | 101-000 | 1:27 |

## Results

| Pos | Name |
|---|---|
| 1 | Bartłomiej KALISZCZAK, UKJ Legion Zamość |
| 2 | Ksawery KRUCZEK, UKJ Millenium Rzeszów |
| 3 | Kordian BORKOWSKI, UKJ Legion Zamość |
| 4 | ~~Ilia KRYVYI, UKS Spartakus Lublin~~ |

# Judo Open Tomczak Cup 25.10.2026 Modliborzyce MU18-60

## Competitors

Competitors: 5

| # | Name | Club | 1 | 2 | 3 | 4 | 5 | Wins | Pts | Pos |
|---|---|---|---|---|---|---|---|---|---|---|
| 1 | Antoni JANOCIŃSKI | UKS Spartakus Lublin | | 100 | 0 | 100 | 100 | 3 | 310 | 1 |
| 2 | Robert SOKOŁOWSKI | UKS Spartakus Lublin | 0 | | 0 | 100 | 0 | 1 | 101 | 4 |
| 3 | Oskar SZPILEWSKI | Akademia Judo PERUN | 100 | 100 | | 100 | 0 | 3 | 300 | 3 |
| 4 | Dawid WILK | Bushidan JUDO | 0 | 0 | 0 | | 0 | 0 | 0 | 5 |
| 5 | Antoni RUSZKOWSKI | Bushidan JUDO | 0 | 100 | 100 | 100 | | 3 | 310 | 2 |

## Matches

| Match | White | | | Blue | Result | Time |
|---|---|---|---|---|---|---|
| 1 | Dawid WILK | 4 | 5 | **Antoni RUSZKOWSKI** | 000-100 | 1:26 |
| 2 | **Antoni JANOCIŃSKI** | 1 | 2 | Robert SOKOŁOWSKI | 100-000 | 0:56 |
| 3 | **Oskar SZPILEWSKI** | 3 | 4 | Dawid WILK | 100-000 | 0:08 |
| 4 | **Antoni JANOCIŃSKI** | 1 | 5 | Antoni RUSZKOWSKI | 100-010 | 1:31 |
| 5 | Robert SOKOŁOWSKI | 2 | 3 | **Oskar SZPILEWSKI** | 000-101 | 0:44 |
| 6 | **Antoni JANOCIŃSKI** | 1 | 4 | Dawid WILK | 100-000 | 0:14 |
| 7 | Oskar SZPILEWSKI | 3 | 5 | **Antoni RUSZKOWSKI** | 000-100 | 1:15 |
| 8 | **Robert SOKOŁOWSKI** | 2 | 4 | Dawid WILK | 101-000s1 | 1:35 |
| 9 | Antoni JANOCIŃSKI | 1 | 3 | **Oskar SZPILEWSKI** | 010-100 | 0:37 |
| 10 | Robert SOKOŁOWSKI | 2 | 5 | **Antoni RUSZKOWSKI** | 001-100 | 1:35 |

## Results

| Pos | Name |
|---|---|
| 1 | Antoni JANOCIŃSKI, UKS Spartakus Lublin |
| 2 | Antoni RUSZKOWSKI, Bushidan JUDO |
| 3 | Oskar SZPILEWSKI, Akademia Judo PERUN |
| 4 | Robert SOKOŁOWSKI, UKS Spartakus Lublin |
| 5 | Dawid WILK, Bushidan JUDO |

# Judo Open Tomczak Cup 25.10.2026 Modliborzyce MU18-66

## Competitors A

Competitors: 6

| # | Name | Club | 1 | 2 | 3 | Wins | Pts | Pos |
|---|---|---|---|---|---|---|---|---|
| 1 | Bruno DUSZA | UKJ Millenium Rzeszów | X | 1 | 100 | 2 | 101 | 1 |
| 2 | Krzysztof WOŹNIAK | Judo Team Modliborzyce | | X | 10 | 1 | 10 | 2 |
| 3 | Maksym HRYTSAIUK | UKS Spartakus Lublin | | | X | 0 | 1 | 3 |

## Matches A

| Match | White | | | Blue | Result | Time |
|---|---|---|---|---|---|---|
| 1 | **Bruno DUSZA** | 1 | 2 | Krzysztof WOŹNIAK | 001-000 | 4:00 |
| 3 | **Bruno DUSZA** | 1 | 3 | Maksym HRYTSAIUK | 100-000 | 0:40 |
| 5 | **Krzysztof WOŹNIAK** | 2 | 3 | Maksym HRYTSAIUK | 010-001 | 4:00 |

## Competitors B

| # | Name | Club | 4 | 5 | 6 | Wins | Pts | Pos |
|---|---|---|---|---|---|---|---|---|
| 4 | Filip WRÓBEL | Judo Team Modliborzyce | X | | 100 | 1 | 100 | 2 |
| 5 | David STANIAK GARCIA | Bushidan JUDO | 10 | X | 100 | 2 | 110 | 1 |
| 6 | Artur GIRNDT | UKS Judo KONTRA | | | X | 0 | 0 | 3 |

## Matches A

| Match | White | | | Blue | Result | Time |
|---|---|---|---|---|---|---|
| 2 | Filip WRÓBEL | 4 | 5 | **David STANIAK GARCIA** | 000-011s1 | 4:00 |
| 4 | **Filip WRÓBEL** | 4 | 6 | Artur GIRNDT | 100-000 | 0:29 |
| 6 | **David STANIAK GARCIA** | 5 | 6 | Artur GIRNDT | 110-000 | 1:24 |

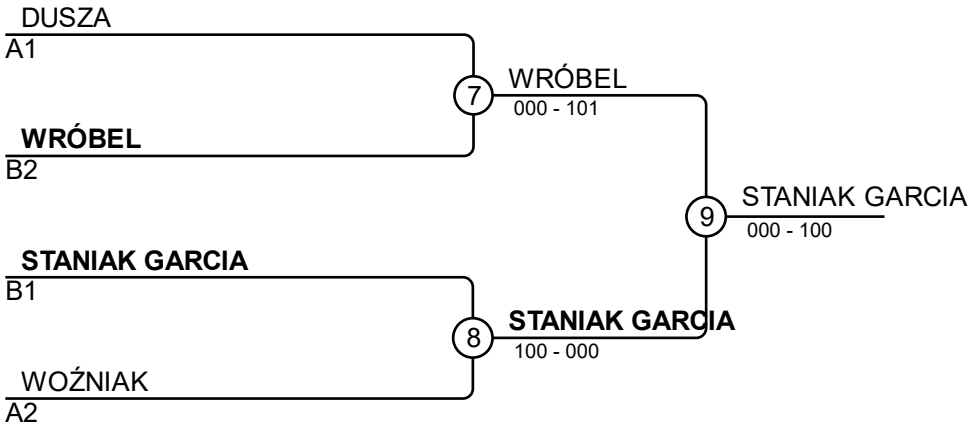


## Results

| Pos | Name |
|---|---|
| 1 | David STANIAK GARCIA, Bushidan JUDO |
| 2 | Filip WRÓBEL, Judo Team Modliborzyce |
| 3 | Bruno DUSZA, UKJ Millenium Rzeszów |
| 3 | Krzysztof WOŹNIAK, Judo Team Modliborzyce |

# Judo Open Tomczak Cup 25.10.2026 Modliborzyce MU18-73

## Competitors

Competitors: 5

| # | Name | Club | 1 | 2 | 3 | 4 | 5 | Wins | Pts | Pos |
|---|---|---|---|---|---|---|---|---|---|---|
| 1 | Adam MARKWARDT | Bushidan JUDO | | 100 | 100 | 100 | 0 | 3 | 300 | 2 |
| 2 | Patryk PAŃCZYK | UKJ Legion Zamość | 0 | | 0 | 100 | 0 | 1 | 101 | 4 |
| 3 | Aleksander DOMOŃ | Skorpion judo Krosno | 0 | 100 | | 100 | 0 | 2 | 200 | 3 |
| 4 | Mateusz DEPTA | Akademia Judo PERUN | 0 | 0 | 0 | | 0 | 0 | 0 | 5 |
| 5 | Jan TKACZYK | Hato Judo | 100 | 100 | 100 | 100 | | 4 | 400 | 1 |

## Matches

| Match | White | | | Blue | Result | Time |
|---|---|---|---|---|---|---|
| 1 | Mateusz DEPTA | 4 | 5 | **Jan TKACZYK** | 000-100 | 0:07 |
| 2 | **Adam MARKWARDT** | 1 | 2 | Patryk PAŃCZYK | 100-000 | 1:36 |
| 3 | **Aleksander DOMOŃ** | 3 | 4 | Mateusz DEPTA | 100-000 | 0:27 |
| 4 | Adam MARKWARDT | 1 | 5 | **Jan TKACZYK** | 000-100 | 0:27 |
| 5 | Patryk PAŃCZYK | 2 | 3 | **Aleksander DOMOŃ** | 001-102 | 3:09 |
| 6 | **Adam MARKWARDT** | 1 | 4 | Mateusz DEPTA | 100-000 | 0:12 |
| 7 | Aleksander DOMOŃ | 3 | 5 | **Jan TKACZYK** | 000-100 | 1:19 |
| 8 | **Patryk PAŃCZYK** | 2 | 4 | Mateusz DEPTA | 100s1-000s1 | 1:07 |
| 9 | **Adam MARKWARDT** | 1 | 3 | Aleksander DOMOŃ | 101-000 | 0:56 |
| 10 | Patryk PAŃCZYK | 2 | 5 | **Jan TKACZYK** | 000-100 | 0:08 |

## Results

| Pos | Name |
|---|---|
| 1 | Jan TKACZYK, Hato Judo |
| 2 | Adam MARKWARDT, Bushidan JUDO |
| 3 | Aleksander DOMOŃ, Skorpion judo Krosno |
| 4 | Patryk PAŃCZYK, UKJ Legion Zamość |
| 5 | Mateusz DEPTA, Akademia Judo PERUN |

# Judo Open Tomczak Cup 25.10.2026 Modliborzyce MU18-81

## Competitors

Competitors: 3

| # | Name | Club | 1 | 2 | 3 | Wins | Pts | Pos |
|---|---|---|---|---|---|---|---|---|
| 1 | Bartosz ŁUKASIK | Bushidan JUDO | | 0 | 0 | 0 | 1 | 3 |
| 2 | Filip POTĘPSKI | Bushidan JUDO | 100 | | 0 | 1 | 101 | 2 |
| 3 | Wiktor WOJCIESZKO | UKJ Legion Zamość | 100 | 1 | | 2 | 101 | 1 |

## Matches

| Match | White | | | Blue | Result | Time |
|---|---|---|---|---|---|---|
| 1 | Bartosz ŁUKASIK | 1 | 2 | **Filip POTĘPSKI** | 000s1-101 | 3:10 |
| 2 | Bartosz ŁUKASIK | 1 | 3 | **Wiktor WOJCIESZKO** | 001-100 | 0:43 |
| 3 | Filip POTĘPSKI | 2 | 3 | **Wiktor WOJCIESZKO** | 002-003 | 4:00 |

## Results

| Pos | Name |
|---|---|
| 1 | Wiktor WOJCIESZKO, UKJ Legion Zamość |
| 2 | Filip POTĘPSKI, Bushidan JUDO |
| 3 | Bartosz ŁUKASIK, Bushidan JUDO |

# Judo Open Tomczak Cup 25.10.2026 Modliborzyce MU18-90

## Competitors

Competitors: 2

| # | Name | Club | 1 | 2 | 1 | 2 | 1 | 2 | Wins | Pts | Pos |
|---|---|---|---|---|---|---|---|---|---|---|---|
| 1 | Wiktor ZDEB | UKJ Millenium Rzeszów | | 100 | | 100 | | | 2 | 200 | 1 |
| 2 | Kacper PLEWICKI | Bushidan JUDO | 0 | | 0 | | | | 0 | 0 | 2 |

## Matches

| Match | White | | | Blue | Result | Time |
|---|---|---|---|---|---|---|
| 1 | **Wiktor ZDEB** | 1 | 2 | Kacper PLEWICKI | 100-000 | 0:16 |
| 2 | **Wiktor ZDEB** | 1 | 2 | Kacper PLEWICKI | 100-000 | 0:28 |
| 3 | Wiktor ZDEB | 1 | 2 | Kacper PLEWICKI | | |

## Results

| Pos | Name |
|---|---|
| 1 | Wiktor ZDEB, UKJ Millenium Rzeszów |
| 2 | Kacper PLEWICKI, Bushidan JUDO |